FLYING ACES

ISSUE #155-81
Jan./Feb. 1994

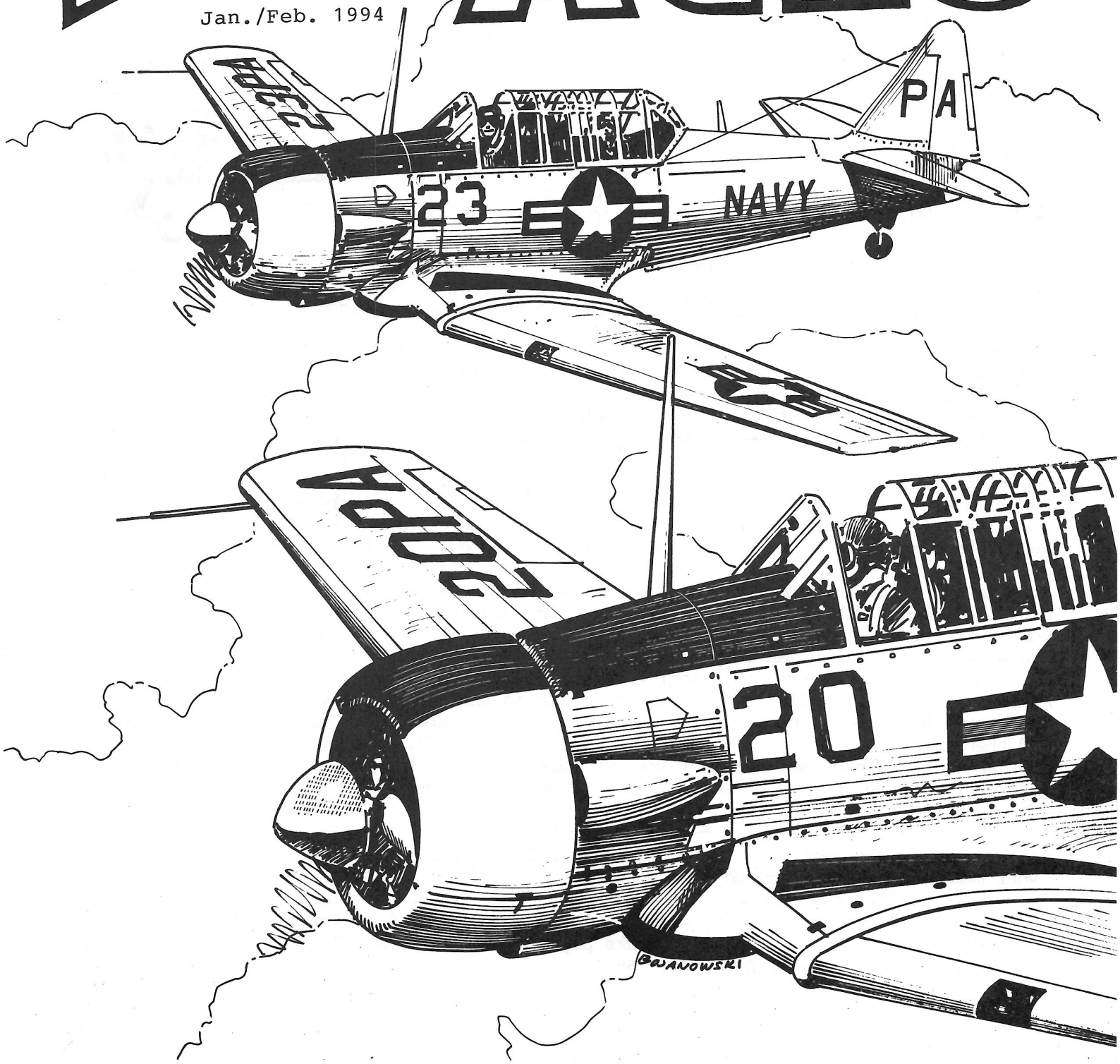

NEWS ON THE WING!

We give you another great cover drawing by Bob Bojanowski, this one of the North American AT-6. We have had this one for some time now, waiting for a decent plan of the AT-6 so that we could run the two of them together. Guess what? Dave Livesay said I'll do one for you! So we are presenting Dave's plan in this issue. Also in this issue we are giving you part one on electric flying by Don Srull. Don also included an electric powered model plan of the Sayers Monoplane by drawn by John Lewars. With this plan and Don's instructions we all should be able to build and compete in the FAC Power Scale event at this years FAC Nats. I want to take this time to thank all of the other Clubsters who made this issue possible.

Once again we are welcoming two more squadrons to the Flying Aces Air Corp. This brings our complement of squadrons up to 43! If you live in their vicinity give them a call, they'll be glad to have you join them.

Squadron #42
The Baltimore Bomber Squad.
Russell Sandusky
9109 Waltham Woods Rd.
Baltimore, Md. 21234

Squadron #43
The Sparrow Hawk Squad.
Bill Harding
4782 Unity Line Rd.
New Waterford, Ohio 44445

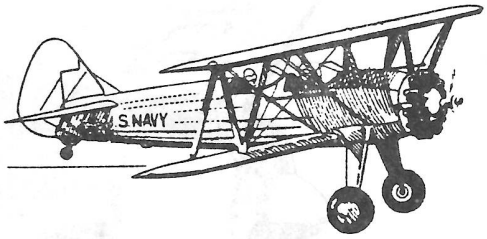

Jerry Bockius, a long-time member of the Flying Aces and a frequent contributor to the newsletter has been ill and we want to wish him a speedy recovery. We need you back on the flight line very soon Jerry. Jerry is also the Squadron Leader of Squadron #20.

During a time when I had a few idle (?) moments, I decided to look through the mailing list to see if I could come up with some kind of an idea of just how old our membership is. All I have been hearing for a long time now was how old we are all getting and that when we take that final flight West our hobby will disappear. Well the figures that I came up with shows me we needn't worry. Our hobby will be in good hands for a long time to come. I like to lump our members in two categories, over 50 years of age ander fifty years of age. I then proceeded to pick out the names of the members that I know and their aproximate age and this is what I discovered. There were 323 members whose age I had a good idea of. Of the 323, there were 86 that were under the age of 50! That, I think is enough to make me think we are in good shape as a hobby. Thanks to Hung, we'll continue.

Juanita and I took a vacation last fall and we went south to Florida and a nice week-long cruise on the Carribean. I won't bore you with details about the trip but I will tell you about our stop at Hobby Supply South. We always drive on our vacations because there are so many places you can stop at along the way and this time was no exception. I discovered that Acworth, Georgia was right on highway I-75 so we decided to stop and see Denny Atkins, the owner. Well, let me tell you, this is the most completely stocked hobby shop these eyes have seen since the 1940's. Denny has just about everything you would want and then some. I haven't seen an inventory like he has for many years. He has kits from just about every manufacturer that you can name. Even to kits from overseas. They were stacked to the ceiling in numbers of upwards of two dozen of each kind of kit. It sure

---

If the box on the right has the dreaded RED "X" in it, it is time to renew your membership which includes the newsletter. Cost is $10.00 per year in the United States and Canada. Overseas the cost is $15.00 per year. Six issues per year published every other month. This is your last issue under your old membership. Please make checks payable to "Flying Aces". Send to FAC-GHQ, 3301 Cindy Lane, Erie, Pa. 16506.

was a pleasure to stop there and I don't think we'll ever go by there again without stop-
png in. Denny also hasa catalog that you can order as he does a mail order business also. To get his catalog send him two dollars, you won't be disappointed. Hobby Supply South, 5060 Glade Rd., Acworth, Ga. 30101. Phone (404) 974-0843.

How many of you took up the offer of that peanut kit of the Martin MO-1 that we told you about in the last issue? You Didn't? Well then, you missed out on a great bargain. The kits were better than I expected! Real nice! If you didn't order one at the bargain price you can still get one, aswell as three other kits that are now ready, only now you will have to pay the full price of $8,95 postpaid. (see ad this issue) Now for some more news on this kit of the Martin MO-1. Doc Martin, of the Miami Squadron, FAC is holding a postal contest for models of the MO-1 built from this kit. This is an indoor contest only and the contest closes on March 20, 1994. Send your times to; Doc Martin, 2180 Tigertail Ave., Miami, Fla. 33133.

In memory of Cole Palen the World War One event at the FAC-Nats will henceforth be known as the Cole Palen World War One event. Cole will be greatly missed by all and in this way we can keep a little of him with us for all time.

Once again, as we have mentioned in the past, if you are going to attend the FAC-Nats in Geneseo, NY this year, we would appreciate it if you can get your entry in as early as possible to save us some time on the paper work later. It really does get hectic around here as the date approaches. Thanks.

BUILD....FLY....WIN...!!!! EFF--AAA--CEEEE!!!!!

Lt. Col. Lin Reichel, CinC-FAC

ELECTRIC POWER FOR SCALE AND SPORT FREE-FLIGHT

Part 1. Getting Started

When electric powered free-flight models began to show up more regularly at the flying field almost 10 years ago (yup, it's been that long), many of us more traditional modelers thought it was some kind of quaint novelty that would soon pass away (plastic toys, O.K. but not real models), or a downright kooky idea (all that battery weight!). But here we are in the midst of what looks to be a rapidly growing use and acceptance of electric power in all phases of modeling, including our beloved FAC kind of free-flight scale and sport flying. And for good reason. Electric is here to stay, not as a competitor to or a replacement for rubber - (are you kidding?) - but as a unique and different kind of propulsion that makes all kinds of new models possible; especially those interesting and off-beat scale-types that were previously impractical or darn-near impossible. Multi-motors, pylon-mounted engines, no-nose-moment subjects, even jets yet. How can F.A.C.ers resist that? Another thing going for electric is that it's really quite easy to use. For most people, I think it's even easier than rubber to reach a comfortable level of skill in its use. Finally, electric is quite inexpensive (compared to other types of motor systems). and it's very reliable. If you haven't tried electric yet, you might like to add it to your bag of tricks.

So how to get started? What's the easiest way to give it a try? Glad you asked - In a couple of short articles, we'll try to lay out a few practical tips on how to get your feet wet. Not much theory - even though we will cover a little basic arithmetic you'll find useful. We'll talk about motors, batteries, chargers, the selection of models, and miscellaneous other topics . Since actually *building* an electric model is the quickest way to learn what it's all about (and a heck of alot more fun), Lin will include a couple of model designs along with the written stuff. The first is a really nifty and simple introductory scale design included in this issue; another electric scale subject will be included in the next installment . So stick with us and build along as we explore these here electrons.

Motor Systems

There are quite a few companies that currently market little electric motors suitable for our free-flight models:

	MOTOR	TYPE and POWER in watts	BATTERY	MOTOR SYSTEM Weight	TYPICAL MODEL APPLICATION
HiLine	MICRO-4 MINI-6	Direct Drive, 4 w Geared, 6 w	2x50mah 3x110mah	20 gm 47 gm	70 - 90 in.^{2} and 30 to 60 gms total wt. 80 - 150 in^2 and 70 to 120 gms total wt.
Kenway	KR1-D KR-1	Direct Drive, 1.4w Geared, 1.5 w	2x50mah 2x50mah	16 gm 19 gm	Peanut model, 25 to 40 gms total wt. Peanut model, 30 to 60 gms total wt.
Knight & Pridham, Ltd.	KP 01A	Geared, 5w	3x50mah	33 gm	80 - 100 in^2 and 70 to 90 gms total wt.
VL Products	HY-70B VL-102	Geared, 5 w Geared, 15 w	3x50mah 3x110 mah	36 gm 72 gm	80 - 100 in^2 and 70 to 90 gms total wt. 150 - 250 in^2 and 5 to 8 oz. total wt.
Watts Up	HI-R1	Direct Drive, 6 w	3x80mah	44 gm	80 - 100 in^2 and 70 to 90 gms total wt.

You'll notice there are two basic types of motors listed above: *direct drive*, where the prop is mounted directly to the motor shaft and turns at the same speed as the motor; and *geared* . where the motor is geared down before driving the prop at a speed typically from 4 to 7 times

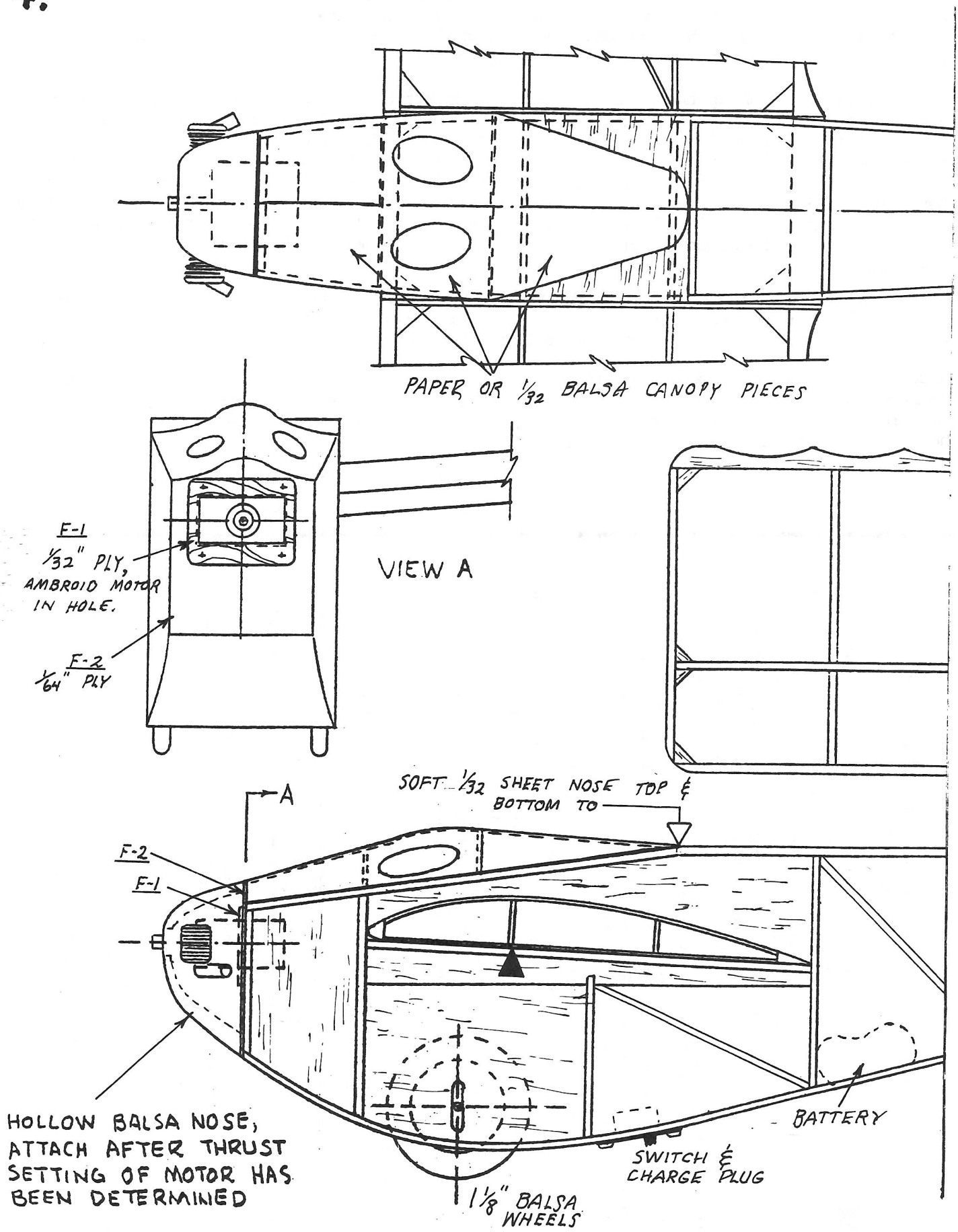
PAPER OR 1/32 BALSA CANOPY PIECES
F-1
1/32" PLY, AMBROID MOTOR IN HOLE.
F-2
1/64" PLY
VIEW A
SOFT 1/32 SHEET NOSE TOP & BOTTOM TO
A
F-2
F-1
HOLLOW BALSA NOSE, ATTACH AFTER THRUST SETTING OF MOTOR HAS BEEN DETERMINED
1 1/8" BALSA WHEELS
SWITCH & CHARGE PLUG
BATTERY

HILINE MOTORS ANNOUNCES NEW ELECTRIC DUCTED-FAN

Attention all FAC modelers: a new product has just been released by HiLine and is ready for immediate delivery. The BLUE FLAME BLASTER is an injection molded ducted fan unit supplied fully assembled and tested. The fan bore is 2½", weight 71 grams, and thrust is 2 ounces on 4 cells. A 30-watt motor (included) supplies the power and will run on 3,4, or 5 NiCad batteries. Length of motor run is two minutes on 4 cells. This is not a kit, but a fully designed unit, ready to drop into an airplane for July's ducted fan scale event at the FAC NATS. Special introductory price: $14.95. Complete free flight system pack #2 which includes all airborne gear including 4 270mAh NiCad batteries is $35.95. Order either package or send $1 for catalog to HiLine, P.O. Box 11558, Goldsboro, NC 27532.

Congratulations go out to Wayne Brock for achieving sixteen victories. Wayne is a member of the "Possum" Squadron, FAC #36. His "Blue Max" medal was presented to him at the squadron's annual banquet.

Congratulations also go to Ron Langford. Ron is member number 1200!

---

slower than the motor speed. Direct drive motors are simpler and lighter than geared units, but are less efficient for our kind of models , since they turn small diameter props at very high RPM. Both have many practical applications. Geared motors can turn much larger props and are especially good for high drag, slower flying models (e.g. WWI biplanes) where lots of pulling power is needed. Clean, light weight models needing a small scale prop (like our sample electric design in this issue) can usefully employ a direct drive system.

The motors listed above should satisfy most of our power needs, ranging from about 1.5 watts (or .002 horsepower!) to 15 watts. That's enough variation to fly anything from 1 ounce peanuts to the larger 8 ounce jumbo jobs.

The motors themselves only weigh a few grams, but including batteries, switches, wire, and other essentials, the motor *systems* weigh in at a little under 1 ounce to almost 3 ounces. Not as light as rubber (for small rubber ships), but plenty good enough for high performance sport and scale flying.

Batteries, Volts and mah

To fly and enjoy electric models, you should know at least a little about batteries. Why? Batteries are to electric models what rubber is to rubber powered models. Batteries store the energy needed to turn the prop to fly the plane; charging the battery is equivalent to winding the rubber motor. This obvious and darn good analogy can be carried a little further to gain some useful insight. The more battery or rubber you put into your model, the more energy can be stored, and the longer and higher your model can fly. For an electric model to fly well, it must carry a reasonable weight of battery; something around 20 % of the model's total weight in batteries is not a bad ratio - which is close to what it is in the case of rubber. As every good F.A.C. pilot knows, it's almost never a good idea to save weight in a rubber model by reducing the weight of the rubber motor (let's take out a few strands Herb, this thing's not climbing very well). For exactly the same reason, it's not a good idea to view the battery as a weight saving opportunity. Rule #1 is : Do not chintz on battery weight.

Flight batteries for our small free-flight models will usually be made up of 2 or 3 nickel-cadmium (NiCd) cells . The cells will be soldered or welded together in series (+ to -). When charged, a single NiCd cell (of any size) will put out about 1.2 volts . A two cell battery will put out 2.4 volts, and a 3 cell battery will have 3.6 volts. The cell's physical *size* (and its weight) determines how large a charge it can hold, which is called its *capacity*. Capacity is measured like this: if a cell or battery can be fully charged with a 1 ampere current in 1 hour, it is said to have *1 ampere hour* capacity. In miliampere units (one thousandth of an ampere) this is the same as 1000 miliampere hours , or 1000mah for short. You can usually find a cell's capacity rating in mah written on its insulation sleeve. In summary, the VOLTAGE of a battery is determined by the *number* of cells in it; the CAPACITY of a battery is determined by the *size* of the individual cells.

The most common cells for free-flight use are the smallest NiCd cells made. They range in capacity from 50mah to 150mah . Such batteries can be fully charged using 1 ampere of current in 3 minutes (for a 50mah battery) up to 9 minutes (for a 150mah battery). Usually we won't *fully* charge the flight batteries, though. It's tough on the battery, and if you accidentally over-charge - phht! - no more battery. (Sounds like rubber again, doesn't it?) Besides, we will usually get more than enough endurance with our models at less than full charge. A good, safe maximum charge is about 75% of the theoretical maximum. Here are some basic numbers about batteries that will help get you started:

6.

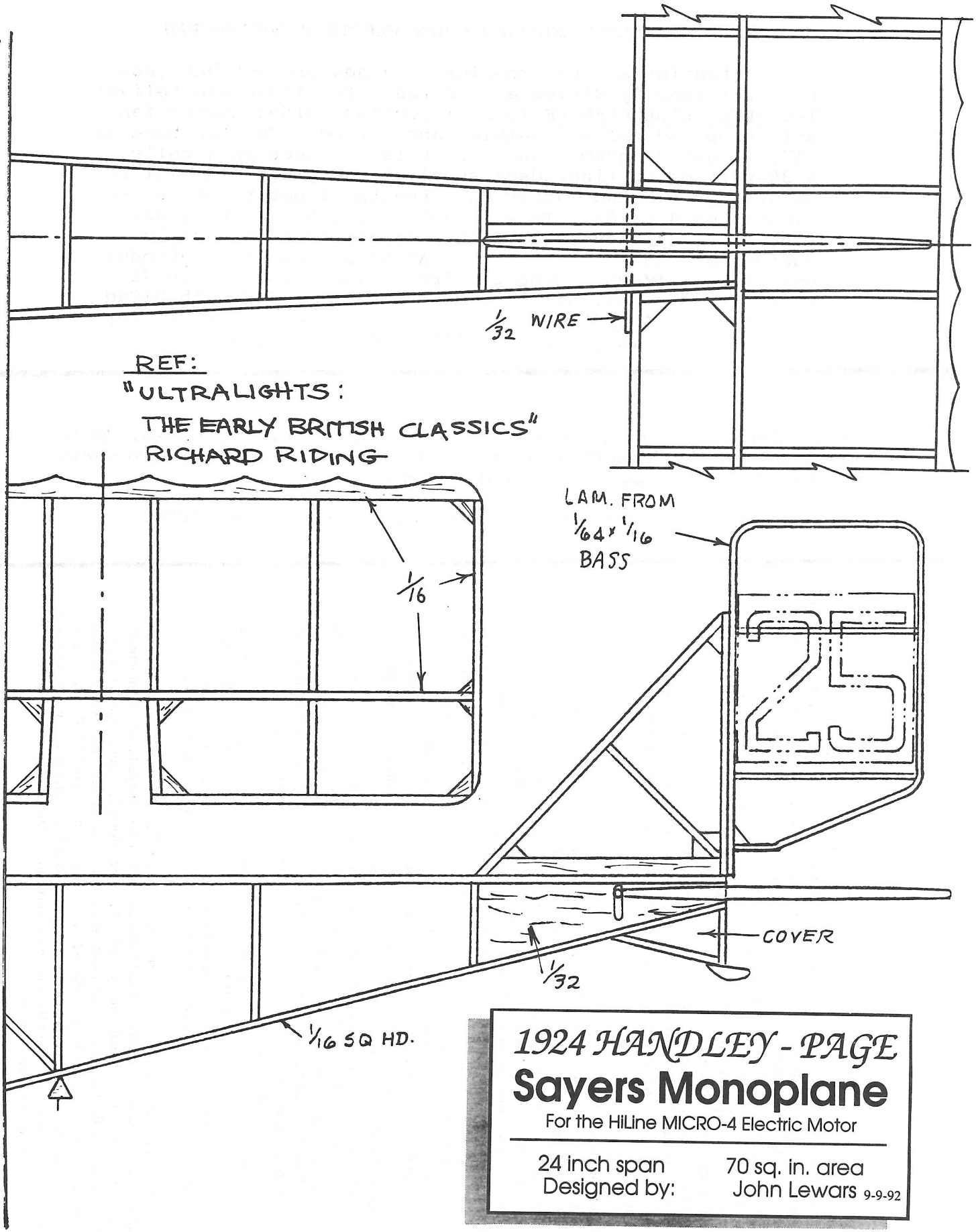

1924 HANDLEY - PAGE
Sayers Monoplane

For the HiLine MICRO-4 Electric Motor

24 inch span — 70 sq. in. area

Designed by: John Lewars 9-9-92

Al Lidberg's plan service has a new address which is; A.A. Lidberg/mps 1008 E. Baseline Rd., Suite 1074, Tempe, Az. 85283.

Mike Midkiff also has moved and to get more of Mike's plans send your order to; Mike Midkiff, 420 Lake Shore Dr., Hot Springs, Ark. 71913.

For a list of some really neat oldtime plans send a S.A.S.E. to; Charles F. Schultz, 910 Broadfields Dr., Louisville, Ky. 40207.

For Celluloid wheels and balsa wheels send a S.A.S.E. to; Country Club Aero Supply Co., 3412 Norton, Independence, Mo. 64052.

Barry Berman, 1375 N. Broadway E-6, Escondido, Ca. 92026 is offering carbon fiber to you for only $1.00 and a S.A.S.E. for ten yards of the stuff!

Got your catalog from Watts UP? This outfit can supply all your needs for electric flight. A S.A.S.E. will get you the catalog. Watts Up!, Box 5702, Hamden, Ct. 06518.

Superior Props
For Rubber Power
BALSA
machine-carved and require only a little sanding and finishing.
Machine Carved Any Pitch
FREEWHEELING 4" to 24" ■ FOLDING PROPS ■ 10"-24" Any Pitch
Right or Left Hand
3 & 4 Blade 4" to 10"
- Montreal Stops
For Coupe and Wakefield
High Aspect Ratio Blades
For Free Info Send S.A.S.E.
Superior Props
2412 Tucson Ave.
Pensacola, Fl. 32526

COMMON FREE-FLIGHT BATTERIES

BATTERY CELL CAPACITY in mah	WEIGHT in grams One Cell	WEIGHT in grams Battery	TIME FOR FULL CHARGE* At 1 Ampere, minutes
50	3.7	2x50 mah = 7.5 3x50 mah = 11.2	3.0
80	5.7	2x80 mah = 11.4 3x80 mah = 17.2	4.8
110	7.4	3x110 mah = 14.8	6.6
150	8.7	3x150 mah = 26.2	9.0

* A safe max. charge is 75% of these times.

Putting It All Together

Good rubber model design and construction practices are perfectly suitable for electric free-flight. There is no real need to change your basic building habits or building materials ; light and sturdy structures are required in both cases. One difference to keep in mind is the fact that in an electric model the motor is a relatively heavy little blob up front, and can sometimes lead to a nose heavy condition - unusual in rubber models. The simplest way to take care of this problem is to make sure you can get to the battery in the model to move it fore and aft, at least during initial trim flights, to allow for some adjustment of the C.G.

Our introductory electric model design, the Handley Page *SAYERS* monoplane, was designed by one of our flying buddies, John Lewars. This neat little British ultralight was built in 1924 to compete in the Lymne trials, and is ideally suited to electric power. It uses the HiLine MICRO-4 direct drive motor, primarily because of its ease of installation. The model has a 24 inch span and about 70 square inches of area. It should weigh between $1\frac{1}{2}$ and 2 ounces all up - an ideal size for the MICRO-4. Reducing the *SAYERS* plan to about 18 inch span (75% size) would give it about 40 square inches, and if kept under $1\frac{1}{2}$ ounces it would be a great model for the Kenway KR1-D motor system. By the way, many of the old 10 and 25 cent kit designs are also ideal candidates for adapting to one of these tiny electric motors.

HiLine has made available a MICRO-4 Starter System package which includes everything you need to get going, including motor, battery, props, wiring harness parts, and a field charger battery box; all you need are 3 alkaline flashlight batteries for the charger. The flight battery included is a 2 cell 50mah unit which will provide quite long flights. For those who insist on much longer flights (over 2 minutes) a 2 cell 80mah battery can also be used. The 80mah cells are difficult to find, but many rechargeable 9 volt batteries, including the Eveready and Radio Shack versions, contain six little 80mah cells. With care, the cells can be removed from the plastic case, and used to make three 2-cell batteries. Beware though, only the *cylindrical*- type cells are useful — the *flat*, button style cells found in some 9 volt batteries are of no use. 2x80mah size batteries are also a little more rugged and less prone to damage by overcharging compared to the 2x50mah batteries, but they do weigh about 4 grams more.

The MICRO-4 comes with a 3.5 inch diameter prop, which matches the motor's power very efficiently, and also happens to be very close to scale size for the Sayers. Tiny hardwood props for the MICRO-4 (both right and left hand for twins!) are also available from Superior Props down in Florida. Carving your own props, or fashioning them from cottage cheese containers is another easy way to tailor the prop to a particular model. Do not use too large a prop, however, since this will cut down power and can over-heat and damage the motor. This leads to Rule #2 : Don't overprop electrics!

8.

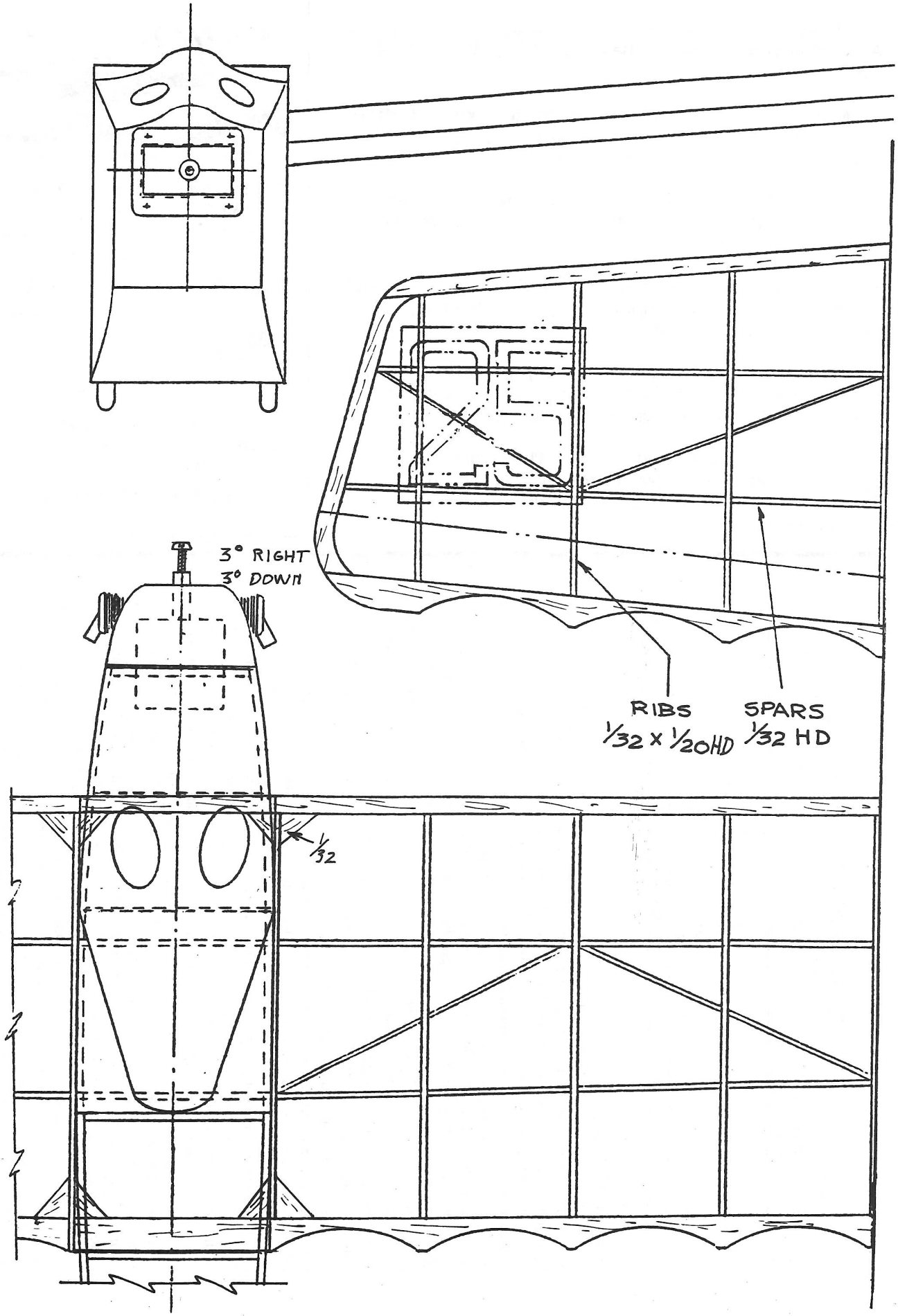

Both the tiny Kenway and the MICRO-4 use a 2 cell battery. This means that they can be easily charged with the most rudimentary and inexpensive chargers. The easiest and (initially) cheapest way to go is to use three flashlight "C" or "D" alkaline dry cells wired together in series and attached to a charge plug. A battery box to hold three dry cells is included for convenience in the MICRO-4 starter package. A simple alkaline cell field charger of this type should last an entire flying season. To use :

- make sure the model switch is turned OFF;
- if the charger is equipped with a switch, turn it OFF;
- plug the charger jack all the way into the model's charging socket;
- turn the charger switch ON;
- time the charge with your watch (start out with a 20 second charge, and increase the time in 10 second steps as the model is trimmed- the safe *maximum* charge time is 2.5 minutes);
- turn OFF the charger switch and pull out the charger plug;
- turn ON the model and launch.

Next session we'll talk about the larger 3 cell motors, more about chargers, charging, and trimming, and also present another scale electric subject for your amusement. Meantime, try the Sayers, but beware of thermals - HUNG loves these things!

Don Srull Oct. '93

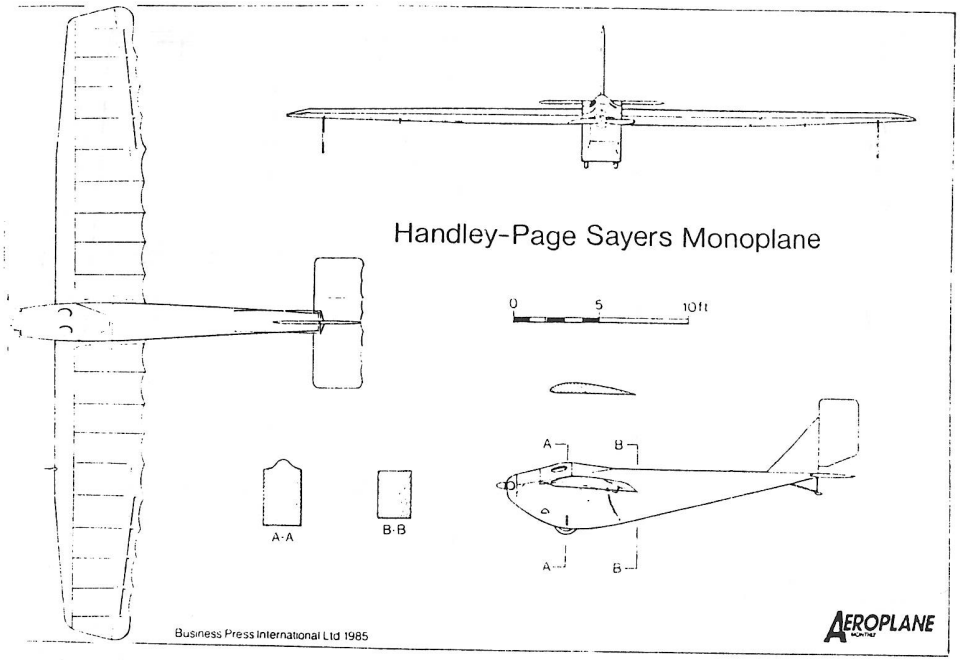

Lil-Planes® Kits
a P-NUT type kit spans 13"
Design by Dave "VTO" Linstrom
1. Martin MO-1 Pub. Aug. M.B. 93
2. Pilatus Porter
3. Kitfox (a home built)
4. Curtis Jenny Monoplane
$8.95
post paid
MAIL
MFG. BY
MODEL AIRCRAFT LABS.
108 S. LEE ST.
IRVING, TEXAS 75060

10.

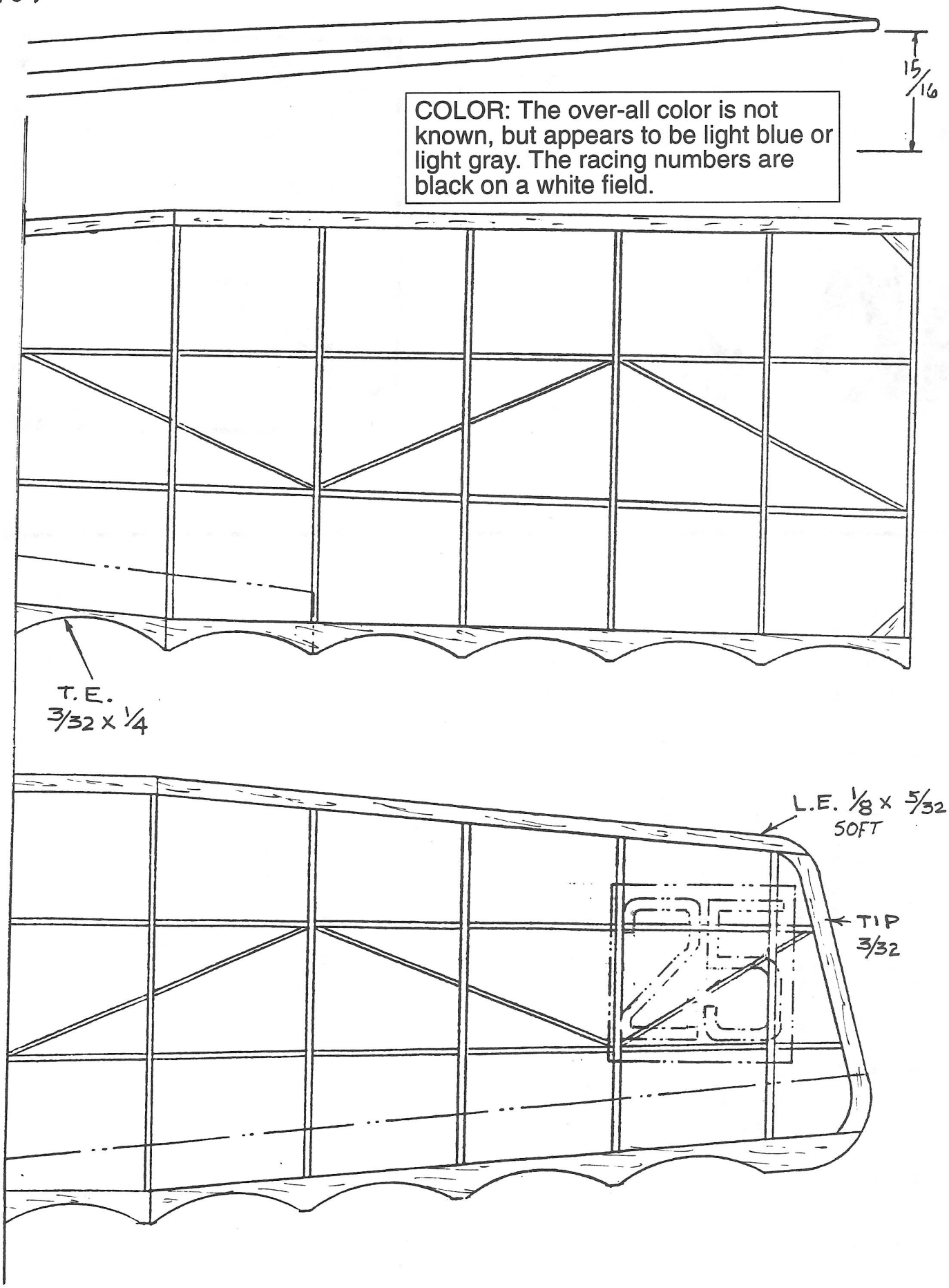

COLOR: The over-all color is not known, but appears to be light blue or light gray. The racing numbers are black on a white field.

IN MEMORIAM

Earl VanGorder

Sic Transit Gloria Mundi. On December 7, 1993, the aviation world lost a giant. Cole Palen, founder of the Olde Rhinebeck Aerodrome, died in his sleep at his winter home in Florida.

Oh, he wasn't a giant, physically - in fact, he was rather a small man. But in his accomplishments, and his vibrant personality, he was truly a giant.

While Cole will be sorely missed by the aviation community around the entire world, there is still an element of happiness. Happiness in the fact that this wonderful man actually existed at all, and gave tothe world so many hours of wonderful entertainment and so much technical information regarding the pioneer aircraft of World War I and the periods both before and after.

Perhaps the most unusual thing about this man who lived to his 68th year, was the fact that he apparently did not have a single enemy. But, he had friends galore and everyone who ever met him, liked him.

At this time, there are 60 excellent replica World War I aircraft at the Olde Rhinebeck Aerodrome and most of them are on flying status. The weekly airshows that were staged will long be remembered by anyone who ever had the privilege of seeing one. These were also happy shows with lots of laughs as the melodrama unfolded with the "evil Black Baron" fighting it out with Sir Percy Goodfellow for the hand of Trudy Truelove. Only a totally happy, and perhaps a bit zany, person, like Cole, could have devised such a fantastic combination of old time "mellerdrama" and early aviation technology.

Fortunately for the world of aviation buffs, Cole had set up a trust to insure that the Olde Rhinebeck Aerodrome will continue to operate in perpetuity.

We should not forget, either, that Cole was also a dedicated modeler. He loved his stick and tissue scale free flight models and even created a model museum in one of the hangars where his static displays are housed. Of course, he also hosted the annual "Jamboree" of WWI R/C models every year. He had purchased his first R/C rig on his way to Florida this very year. Unfortunately, we'll never know what his first R/C model would have been. My guess is that it be a scale WWI type.

My favorite Palen quote is what he said about his enterprise at Old Rhinebeck, when he referred to it as "a hobby out of control".

In closing, I'd just like to say, "Thank you, Cole". Thank you for the privilege of having known you.

S.O.S.--S.O.S.--S.O.S.

Wanted; Dick Mallow, 2403 New Albany Rd., Cinnaminson, NJ is looking for 3-views or any scale info for the Vought Corsair bi-plane.

Wanted; A plan, 3-views and any scale info for the Rearwin Cloudster is needed by Ross Mayo, 3838 Woodcrest Ct., Erie, Pa. 16506

Wanted; Any scale material for the Goodyear winner Nemesis. Dave Livesay, 1911 Carmanbrook Pkwy., Flint, Mi. 48507-1445.

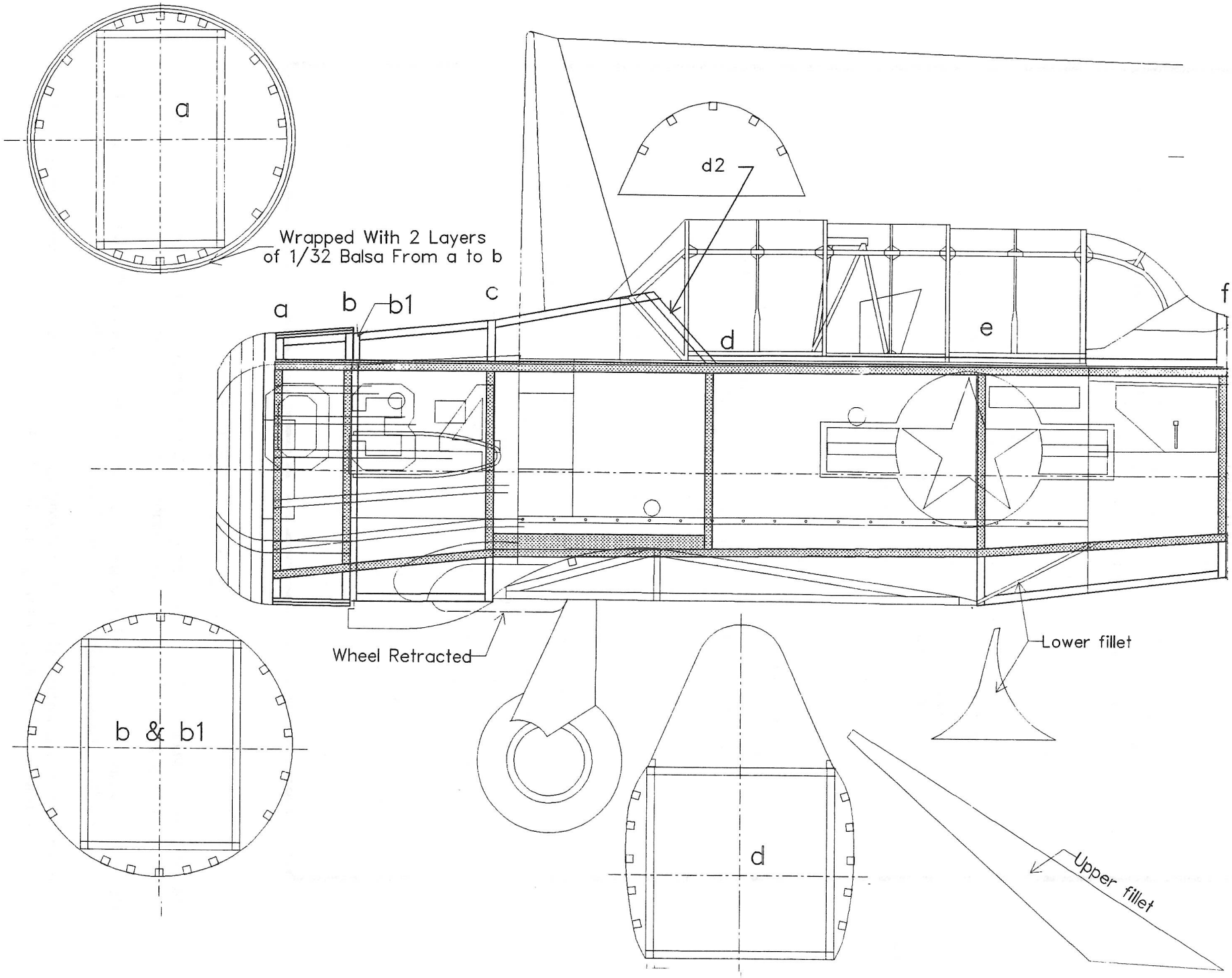
a
Wrapped With 2 Layers
of 1/32 Balsa From a to b
d2
a
b
b1
c
d
e
f
Wheel Retracted
Lower fillet
b & b1
d
Upper fillet

FLYING ACES PLANS

We are still offering the FAC Plan Packets to you. Price is $8.00 each Plus $2.00 each for postage. Pack #1 has 10 plans on 16 sheets (11 X 17), Pack #2 has 11 plans with the same format. All of these plans have appeared in the very early issues of the newsletter and most of you have probably never seen them. Your continued support by purchasing these plan packs continues to keep our overall operating costs to a minimum.

Send your order to; FAC-GHQ, 3301 Cindy Lane, Erie, Pa. 16506.

****

Dear Kernel,

Sorry I missed the '93 bash; sure enjoyed the '92 affair. Good flying, good quarters, good food!

The enclosed photo built from a Scientext plan (see photo page). Hull covered with lite-span, rest all Japanese tissue. Total 190 gm. Makes me feel good to see it soar overhead on ONE electric motor while that amateur Don Srull needed 12 motors to get his flying boat airborne.

Love and kisses, Otto

WANTED: Hawk Model Aeroplane Co. solid balsa kits or other discontinued solid balsa kits; Sierra Nevada Models kits. Builder/Collector will pay top prices. George J. Santikian, 7285 N. Channing Ave., Fresno, CA 93711 (209) 439-3363

WANTED: Information regarding Air-King Model Aircraft Co., Inc. Last known address was 5204 S.E. Foster Blvd., Portland, Oregon U.S.A. Contact George J. Santikian, 7285 N. Channing Ave., Fresno, CA 93711 (209) 439-3363

Peanut & No-Cal Scale Postal Meet News

The Peanut and No-Cal Postal Contest is now on Skysters! This contest will end on May 30, 1994. Entries postmarked after May 31, 1994 will not be accepted. All you have to do to enter is fly your model, peanut or no-cal, time them and send the time, name of the model and the wing you flew it in to FAC-GHQ. The four wings are; Outdoor Peanut, Indoor Peanut, Outdoor No-Cal and Indoor No-Cal. Contest times count too. Fly as many models as you wish as many times as you wish. Every time you better a score with a particular model send it in. Send scores to; FAC-GHQ, 3301 Cindy Lane, Erie, Pa. 16506. Scores to date:

OUTDOOR PEANUT

Pilot	Plane	Time
1. Doc Martin	Waco	62 sec.
2. George Nunez	Caudron 460	47 "
3. Ron Hummel	Lemberger LD-20B	46 "
4. Walt Leonhardt	Nesmith Cougar	39 "
5. Ron Hummel	ME-109E	32 "

INDOOR PEANUT

Pilot	Plane	Time
1. Jim Anderson	Ord-Hume	46 sec.
2. George Bredehoft	White Monoplane	32 "

OUTDOOR NO-CAL

Pilot	Plane	Time
1. Ron Hummel	Olds Tailwind	935 sec.
2. Mike Ransom	F4U Corsair	291 "
3. Dave Linstrum	Farman Postale	125 "
4. Mike Ransom	OS2U Kingfisher	105 "
5. Walt Leonhardt	Martin MO-1	42 "

OUTDOOR NO-CAL

Pilot	Plane	Time
1. John Vorhees	Farman Postale	296 sec.
2. Barrie Taylor	Lacey M-10	273 "
3. Barrie Taylor	Bristol Scout "D"	195 "
4. Dan Benner	Grumman F4F	137 "
5. Michael Spiess	Grumman F4F	119 "
6. Chuck Powell	Cassutt Racer	119 "
7. Chuck Powell	Taylorcraft	111 "
8. Mike Matrie	Arsenal DeLanne 10	81 "
9. Jim Anderson	Tipsy, Jr.	71 "
10. Jeff Englert	Farman Postale	59 "
11. Paula DiDonato	Waterman Gosling	53 "
12. Jan Jones	Plymacoupe	49 "
13. George Bredehoft	Dayton-Wright RB-1	47 "
14. Tom Derber	Rider R-2	41 "

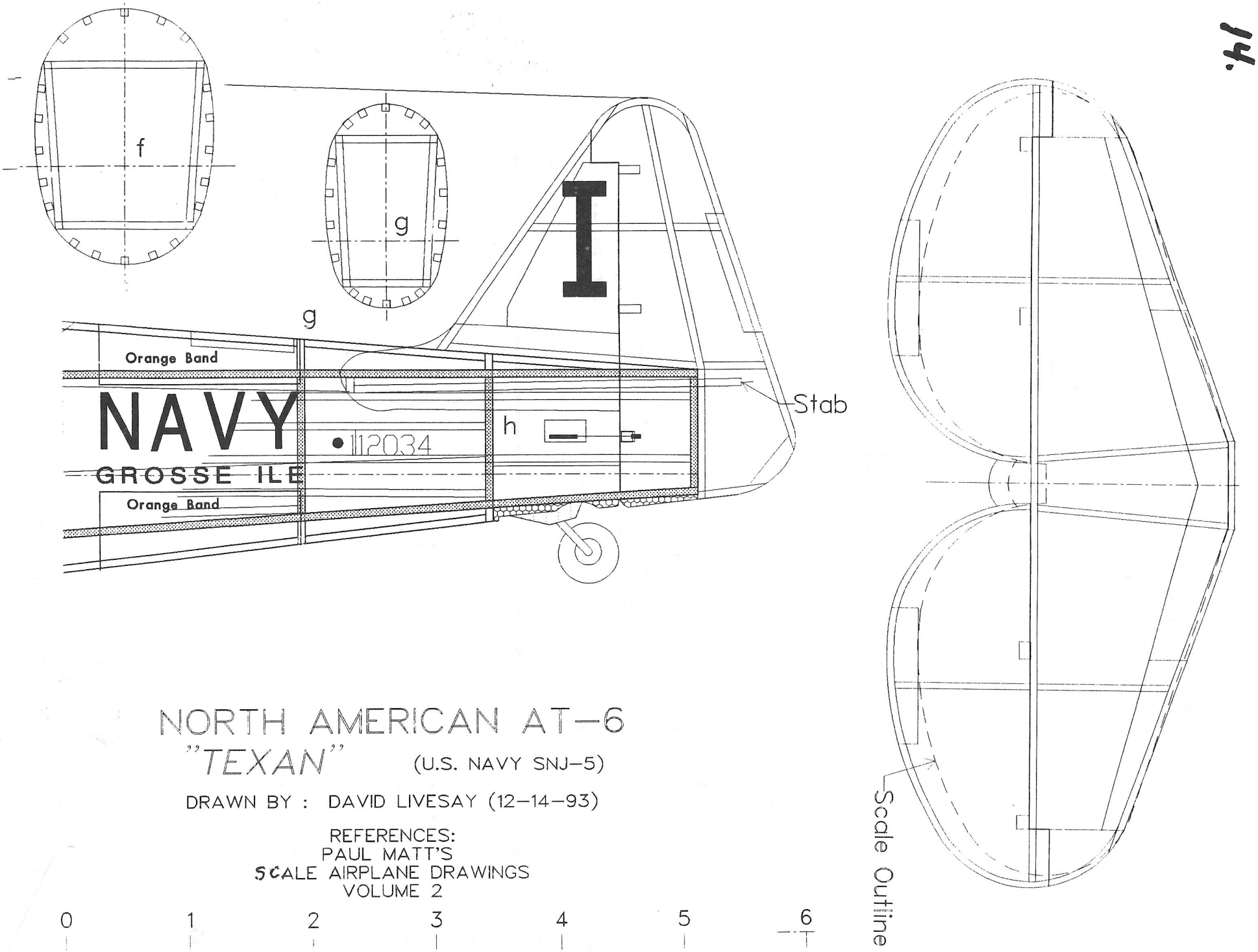

NORTH AMERICAN AT-6
"TEXAN" (U.S. NAVY SNJ-5)

DRAWN BY : DAVID LIVESAY (12-14-93)

REFERENCES:
PAUL MATT'S
SCALE AIRPLANE DRAWINGS
VOLUME 2

0 1 2 3 4 5 6

TAN-2 and the New F-"A-C" Curve

(The Dope on Scale Rubber Power, and a Disclosure of Hung's Purpose)
by "Maestro Mechanico", conclusion

Tan-2 offers a new kind of curve-flattening and corresponding flight-pattern, which has much of the best of both the A and C curves. With it, we can effect a new form and enter a new age of FAC flying: on an "A-C" curve. To understand this, first we must become able to design our motors with predictive precision. For this, we need to know and use three simple mathematical formulas, which Bill McCombs, (Making Scale Model Airplanes Fly) kindly provided me with several years ago, which I have found indispensable ever since. They are dead-accurately predictive. First:

1) Relative turns/" = 1/ Relative cross-section $^{.5}$

--"Relative number of turns per inch equals 1 divided by relative cross-section to the power of .5" --or, "...equals 1 divided by the square root of relative cross-section." For example, we have a four strand motor which takes 1000 turns and add a 5th strand to it. Now it has (5/4,=) 1.25 times its previuos cross-section. On our calculators we press "1.25--exponent-key--".5", and then divide 1 by the result -- 1/1.118, = .9, rounded off. Now we can get 900 turns in before she snaps.

Next, we want to know how much we have increased torque. Per Bill:

2) Relative torque = Relative cross-section $^{1.5}$

--"Relative torque equals relative cross-section to the power of 1.5." Press "1.25" --exponent-key--"1.5." There is 1.4 times the previous torque.

Last, we what to know how long the prop will now spin relative to what it did before--say, 50 seconds. So we obtain relative revs-per-second:

3) Relative RPS = Relative Torque $^{.5+}$

--"Relative RPS equals relative torque to the power of .5"--or, "...equals the square root of relative torque." Press "1.4" (from application of Formula 2) for relative torque)--exponent-key--".5". We get: 1.18. So there are .9 relative turns and 1.18 relative rps, so relative time of prop-run is .9/1.18: .76. 50 seconds X .76 = 38 seconds.

There is a simple corollary to Formula 2) which we need for our designing. Say we know how much more torque we want, and need to know how much thicker to make our motor in order to obtain it.

2-A) Relative Cross-section = Relative Torque $^{.67}$

Say we wanted 40% more torque. Press "1.4"--exponent-key--".67". The answer 1.25. Add a fifth strand, you've got it.

Now we are ready to design for an "A-C" curve, and in doing so, we are following, but in specific terms, Dick Obarski's advice (H.P. #158) and Jack McGillivray's example. We are going to use a shorter-thicker motor of Tan-2 than we did of Tan-1 which did best for our favorite ship. What Jack did was reach into Rich Miller's "flight"-bag, fish out a Tan-2 motor which, shorter-thicker, looked about right, and, with "Irish luck," broke the Canadian Indoor record! So if your Irish and have afriend like Rich, you have an alternative to what I propose here. Otherwise read on. We are going to design our Tan-2 motor to have the same (average) torque as our best Tan-1 did. We know that Tan-2 of same cross-section has .8 relative torque, so we want (1/.8,=) 1.25 times the torque. Applying Formula 2-A, we learn that we need 1.16 times the Tan-1 cross section*. Next, we are going to keep motor-weight the same--for reasons to become clear--as, roughly, Jack did. So we cut it (1/1.16,=) .86 times as long-reducing slack by 14%. How many turns will it take, relative to the Tan-1 motor? .86 as many by length, 1.3 times as many by the finding that Tan-2 takes 1.3 times the turns at equal cross-section, and, applying Formula 1) to 1.16 times the cross-section, .93 turns..86 X 1.3 X .93 = 1.04. Of course, because torque and weight are the same, and (assumed) relative energetic capacity is 1.04. 4% more turns at same torque means we'll get 4% more times on the prop and--if all else were the same--only 4% more duration. That's what the Wakefielders will get out of Tan-2, but us FACers get a lot more. With that Pirelli-like "character" and reduced slack, we can obtain the new, second form of "flattened" torque-curve and flight pattern. The "A-C" curve.

With Tan-2, as we used to with Pirelli (when it didn't blow 10 seconds into the climb), we have much less differential than with Tan-1, between torque at the launch-burst and subsequent torque yielded before level flight (relative to the air, which itself may be rising or falling relative to us Clubsters below). Less differential in torque means less differential in lift, and that means that we need less differential trim. Differential trim is trim to prevent stalling, for the first flight-movement, which has greatest lift and nose-up stalling tendency; versus trim for minimal rate of descent after the climb--the second movement in a flight. Downtrim for the first sector of the flight, up-trim for the second. Like two planes in one--and they are in conflict with each other. One, dominant in the first part of the flight, uses downthrust and /or banking, not to lift to much. The other tries to lift as much as it can. The less differential in torque, then, the more the airplane becomes single-minded. Obviously, we want it to be single-mindedly buoyant, and with Tan-2 we can afford to make that happen by using less climb-downtrim and letting out a small percentage of the last turns wound in. The plane now starts its climb with less torque than it did with Tan-1--and then continues its climb, long and smooth, with much more! We have made the already intrinsically flatter first sector of the Tan-2 curve yet flatter, need less down-trim for the climb, and so, have more energy and lifting in our climb--with less or no stability problems!

The other"end" of the power-run and flight has already been taken care of--"flattened"--by 14% less slack. There is a "kick" at the end of the power-run, free of charge! And far reduced chance of bunched knots at the rear in the glide--because the motor is both shorter and thicker.

A-C-curved flight, then,is up strong and smooth, much higher average altitude, staying up there much longer, then gliding much better. More graceful and realistic than the usual A-flight, and makes up for less grace and realism than C-flight with good penetration--and the kind of altitude which Hung smiles upon.

You think I'm joking? I'm not. You think we'll lose even more ships to Hung. But--with seeming paradox--flying at high altitudes longer will mean less lost ships. For the F-"A-C" curve is but the fruition of an until-now invisible plan for the evolution of the FAC, which Hung has been behind all along. Let's examine the facts about Hung's behavior, and put some apparently unrelated historical FACts together. Like all gods, Hung has two aspects: one pleasant, one a pain in the aft flying surfaces. The image to which we were first introduced (FAC News #6,1968) was the former, that of a kindly old man, based on a report made by the proxy-pilot of one of Dave Stott's high-altitude ships--assumedly the aesthetically advanced (especially by today's standards) Ionosphere Intruder (FAC NEWS #4, 1980), or its prototype. Now, let's try to see things as they really are. Hung revealed himself, and manifested a kindly face, when he was deliberately visited. In turn, the typical O.O.S. and-never-found FAShip is a

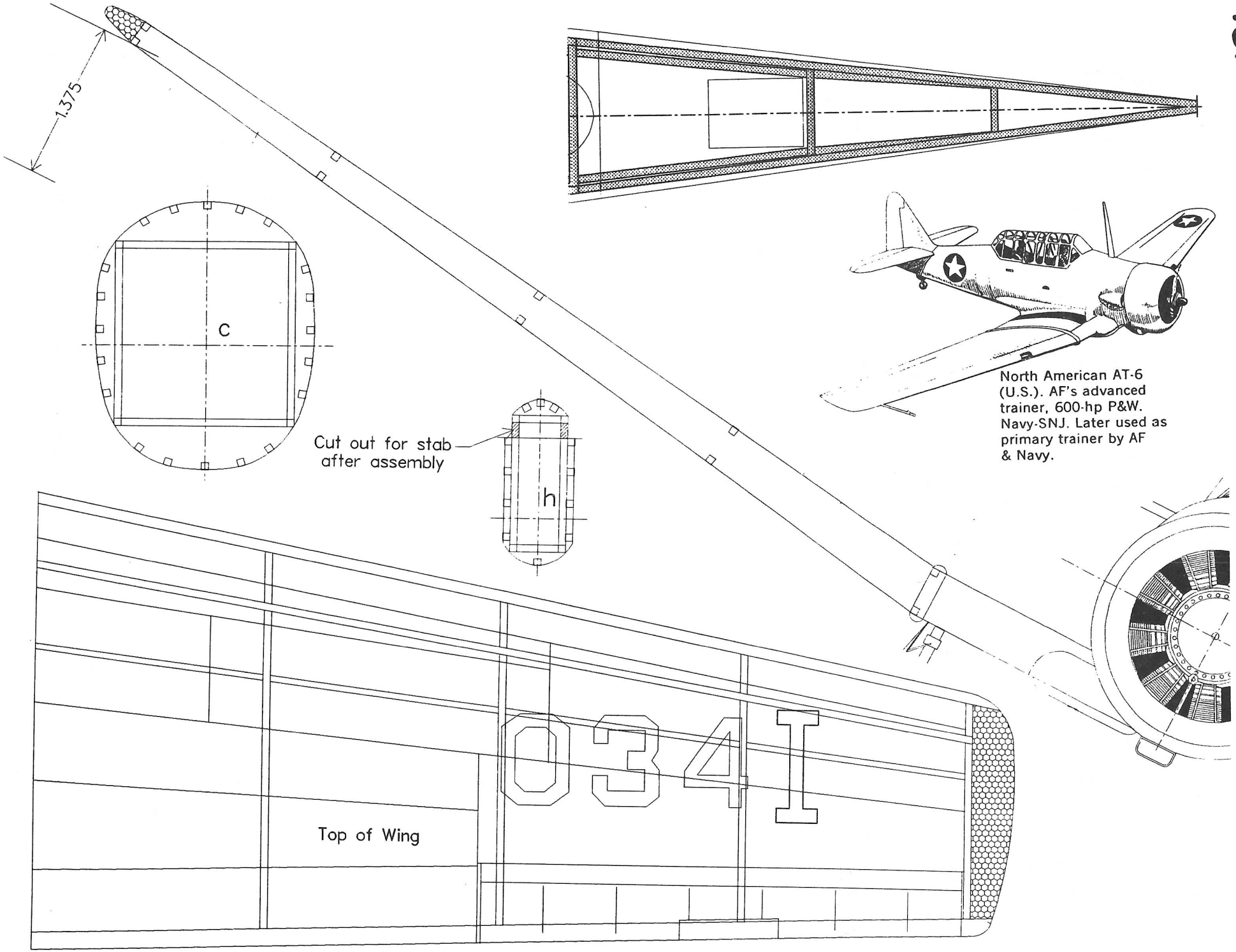

North American AT-6 (U.S.). AF's advanced trainer, 600-hp P&W. Navy-SNJ. Later used as primary trainer by AF & Navy.

medium-altitude floater, which, as it were, just tools along at slow speed ignoring Hung. The ship that does not visit gets lifted, and here we have the key to Hung's negative side. It is obviously no accident, but a symptom of the Underlying Cosmic Order, that the word "lift" has two meanings. One is "to elevate, "whence the nominal derivative meanings, "up-air" and "airfoil-effect". The other is "to steal." Behind this duality is none other than Hung. When he is displeased by failure to visit Him, he steals (lifts in both senses) your plane. Ipso-facto, fly high longer and he'll return it.

Hung, then, wants more FAShips in his region, more of the time. That is our first and basic factual clue to his plan. The rest is a striking series of recent FAC events. First, with Zen-spontaneity, as though directed by a higher force, our Commander excludes from duration-events all devices which make for higher turns: torque ratios without loss of motor-weight--in effect, outlawing low-altitude flight in mass launches, Golden Age and Embryo. Despite the Guru's long-standing campaign to propogate the C-curve, as by gears; arguments as to the potential of gears (or gearless transmissions) to bring more intrinsically short duration planes into historical events, notwithstanding. (The Guru's campaign was logical, but as we must now recognize, not also theological. It ignored Hung.) Second, Ed Dolby produces a new type of tan rubber which is of minor advantage to his primary customers: those builders of giant non-scale ships each of which consumes enough rubber for a whole first round FAC mass launch. But it is a rubber which "just happens", when most strategically used in scale ships, to greatly increase duration, and to do so in such a way as to bring entire mass-launched fleets and ionosphere-penetrating experimental ships closer to Hung for longer periods. Third, with what tongue-in-cheek, I called "Irish luck," Jack McGillivray "accidently" finds a Tan-2 motor made by somebody else for somebody else, which exactly obtains an A-C curve for his plane, which then breaks an indoor record with it. As though Hung didn't want anybody to notice. (No, he doesn't control indoor atmosphere, but, as the Big Picture makes plain, his powers do extend to the inspiring of Clubsters who are attuned to him.) ...Those who would attribute the preceding patterned series of strange events to "coincidence" would fly in the face of logic. Whereas they are being called upon from on high to fly before the face of Hung, whose Great Plan is now clear. Hung wants more visits from us Wingsters via our proxy-pilots. Sure, Lin, Ed, and Jack may imagine that they "knew what they were doing" and acted independently of each other. But it is undeniably obvious that their actions were orchestrated by a higher power, and that each has been used as a mere vehicle of Hung's will. So: FLY--VISIT HUNG--WIN!--WITH TAN-2 ON AN FAC-CURVE!

*Strip it, or weigh your Tan-1 loop, then find a section of Tan-2 of equal length and nominal width, which weighs about 1.16 times as much. All rubber varies like this, in weight-per-nominal-width.

****

Contest Results

Please send all contest results directly to; Roy Courtney, Box 88, Elma, N.Y. 14059.

FAC Squadrons

For a list of all FAC Squadrons send a self-addressed, stamped envelope to; FAC-GHQ, 3301 Cindy Lane, Erie, Pa. 16506.

Airmail Pals

Dear CinC,

In a recent issue of the FAC News, the Glue Guru interviewed Ralph Kuenz about, among other things, choice of prototypes for a competitive WWII combat airplane. Although I don't have Ralph's credentials, I thought I would Pass along a figure of merit I use to evaluate the "long nosedness" of WWII airplanes.

I define the "nose length" (or nose moment arm) of the airplane as the distance from the one-third chord point to the thrust bearing. If the wingspan is divided by this nose length, for any prototype, you get a number. The smaller this number is, the more "long-nosed" you can say the prototype is--except that this does not work well, when you are comparing prototypes with quite different aspect ratios. To get around this problem, the number I use to rate "long-nosedness" is the square root of the wing area, divided by the nose length. The lower this number is, the more "long-nosey" the prototype is.

Here are figures for some useful WWII combat prototypes:

Yak 9D	1.91
Nakajima C6N1 Myrt	1.67
Spitfire Mk. XIV (clipped)	1.65
No. American P-51A	1.64
Focke-Wulf FW. 190D-9	1.62
Caudron-Renault CR.714	1.62
Curtiss P-40B	1.61
Focke-Wulf Ta. 152H-1	1.53
Bell P-39Q	1.50
Focke-Wulf Ta. 152C-3	1.41

Some comments; The Spitfire Mk. XIV used a Griffon engine, which was a few inches longer than the Merlin. In addition, to make room for a two-stage supercharger, the engine was moved ten inches forward from earlier models. This makes the Mk. XIV much more "long-nosey" than earlier models; the clipped wing version is even more "long-nosey".

I like the P-51A over later models. The Allison engine in this airplane was considerably shallower, from top to bottom, than the Merlin used in later models. This allowed the whole fuselage to be shallower in profile than the P-51B, and the fin and rudder were somewhat smaller, also. Unfortunately, most three-views are incorrectly drawn, and show a Merlin-sized fuselage on the P-51A and earlier versions.

The P-40B and C had longer noses than all later production versions of the P-40, so these versions are the choice for a rubber model of a P-40.

The Fw. 190D-9 is a very "long-nosey" prototype, and the Ta. 152 added even more nose length to the D-9. The Ta. 152H-1 has beautiful high-aspect-ratio wings, but the Ta. 152C-3 gives a much longer nose (and tail) for the same wing area, and is my choice for a WWII combat prototype, even though its mottled color scheme demands an airbrushed finish.

Someday, I will actually build one of these airplanes.

Sincerely yours,
Charles Schaaf

NORTH AMERICAN AT-6
"TEXAN" (U.S. NAVY SNJ-5)

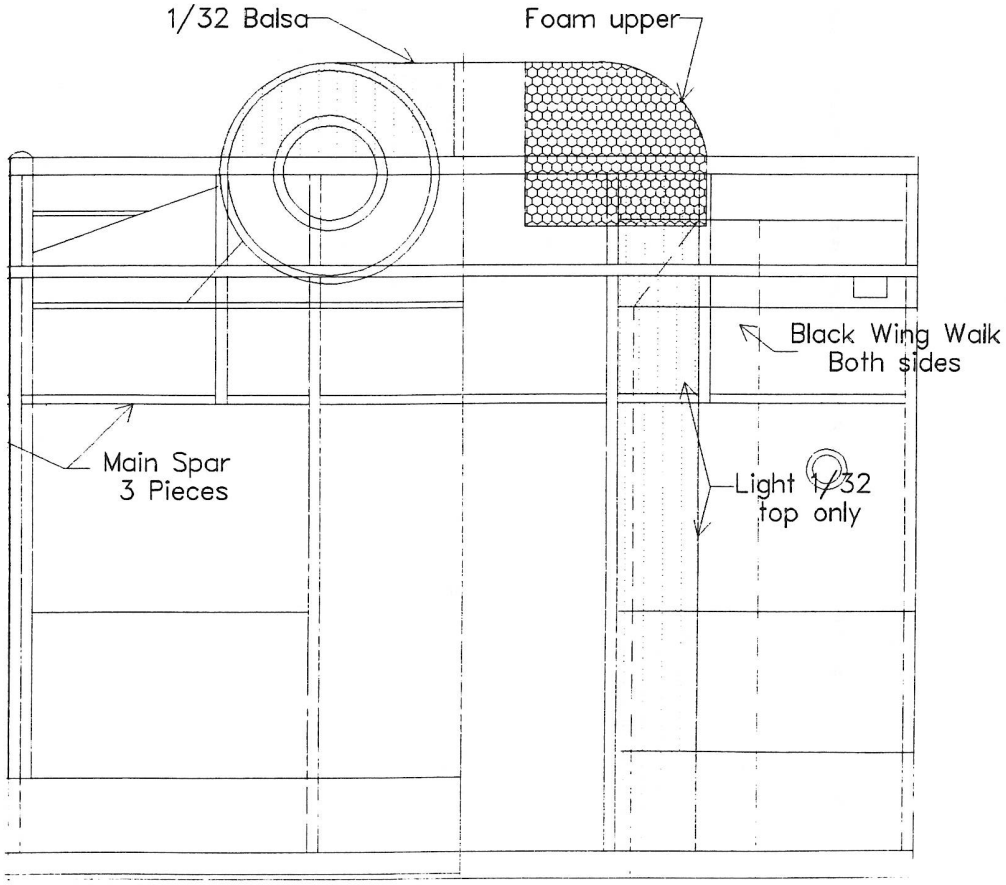

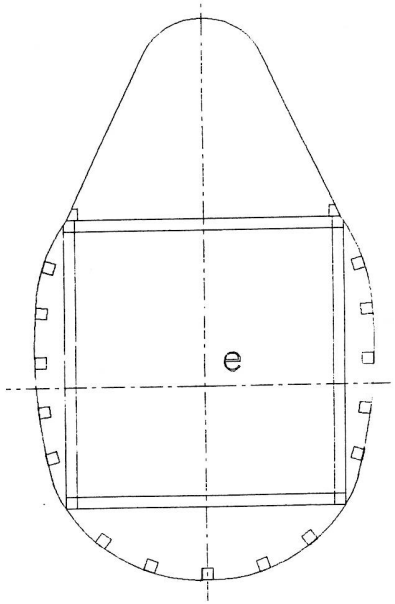

Color Notes:

Overall Yellow with Orange Band
Lettering Black
Olive Drab or Black Antiglare Top Front

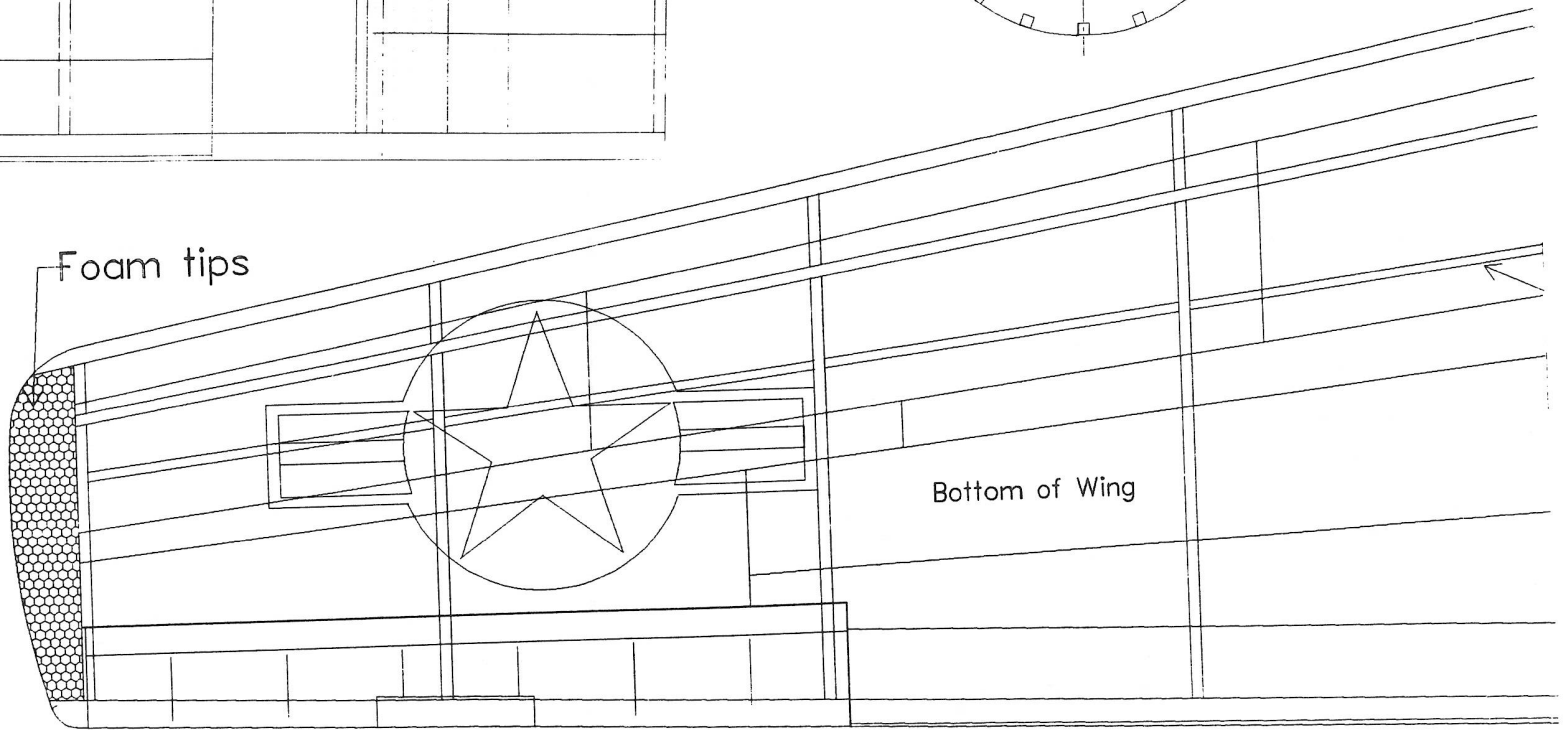

Building Details:

The wheel wells between the fuselage and wing will have to be shaped to fit the model. You also might want to fill the lower front and wing area with balsa sheet.

* * True Pitch * *

Mumbo Jumbo # 60 from the pen of the Glue Guru

Salutations, disciples! Today let us consider the rationale for 'true pitch', a form of prop design frequently described though rarely examined. Most recently, FM has supplied an article containing the necessary trig tables. One has the feeling that given enough labor, it can be done. Let us ask: why?

The usual argument has to do with 'constant advance' - if every portion of a prop is equipped with the same pitch, each turn will advance all prop bits equally. By implication, not to have true pitch suggests some part of the prop as lagging behind or slipping, to be forcibly dragged along by the working portions. This amounts to argument by analogy, with a wood screw serving as model. The unfortunate thing here is the choice of analogy - props do not screw themselves through the air, nor do they 'bite' the air. True, these poetic terms of description have been around for a long time and there were even useful attempts to quantify 'slip' back in the days of Prof. Langley and Manley, about a century ago. However, the analogy turned out to be weak and was generally dropped during the Great War, to survive only within model aeronautics.

What do props really do? They induce an increase in velocity for that air moving through the disc swept by the revolving prop. This additional breeze is what it's all about. A good prop makes a bigger breeze (more thrust). A bad prop either makes a smaller breeze, or it spends more energy in arriving at the desired amount of breeze. These breeze statements are not analogies; they are literally true.

Much research has gone into studying the pertinent breeze: the induced velocity. We know something about the way it is distributed across the prop diameter. The center portion of the prop, some 1/3 of the way towards the tip, that is, bounded by 1/3 rad, contains a negligible amount of induced velocity. For this reason, local pitch doesn't matter. Common sense suggests making this prop portion strong and low in drag. Appearance aside, those performance people using a wire in this zone have it right.

Of importance is the zone extending from 1/2 to 7/8 rad, where most of the induced velocity is generated. In particular, the peak output at 2/3 to 3/4 rad warrants care in the way of pitch choice, with most models (outdoor rubber) best at blade angles of 20 to 30 degrees.

However, the real importance of pitch at a certain locale is not to be confused with the desirability of constant or 'true pitch'. There is no known case for constant pitch, beyond a certain poetic neatness. Don't fret it.

Zack Mosley, 87, Dies; Created 'Smilin' Jack'

STUART, Fla., Dec. 24 (AP),— Zack Mosley, who mixed humor with aviation in his "Smilin' Jack" comic strip, died on Tuesday at Martin Memorial Medical Center here. He was 87.

The cause was a heart attack.

Inspired by a mail plane that flew over his boyhood home in Oklahoma, Mr. Mosley created a comic strip full of characters based on real people and detailed drawings of aircraft.

The biggest fans of his syndicated strip were those who had lived through World War I and World War II. "Smilin' Jack" appeared in more than 300 newspapers from 1933 to 1973.

"It was the most popular aviation adventure strip in the country in the 1930's and 40's," said Ron Goulart, editor of the Encyclopedia of American Comics. "This was a time when flying was literally by the seat of the pants. There was a romance to aviation, and Mr. Mosley got in on that."

The strip began in 1933 as "On the Wing." The story of nervous flying students became popular several months later when The Chicago Tribune-New York News Syndicate changed the title to "Smilin' Jack."

The strip featured a motley cast of characters, including Fatstuff, whose belly was so big that buttons popped, and a dashing faceless pilot, Downwind Jaxon, who symbolized the period's colorful aviators.

Mr. Mosley is survived by his wife, Betty; a daughter, Jill, of Gainesville, Fla., and three brothers, Joe of Stuart, Bob of Merritt Island, Fla., and Doyle of Oklahoma.

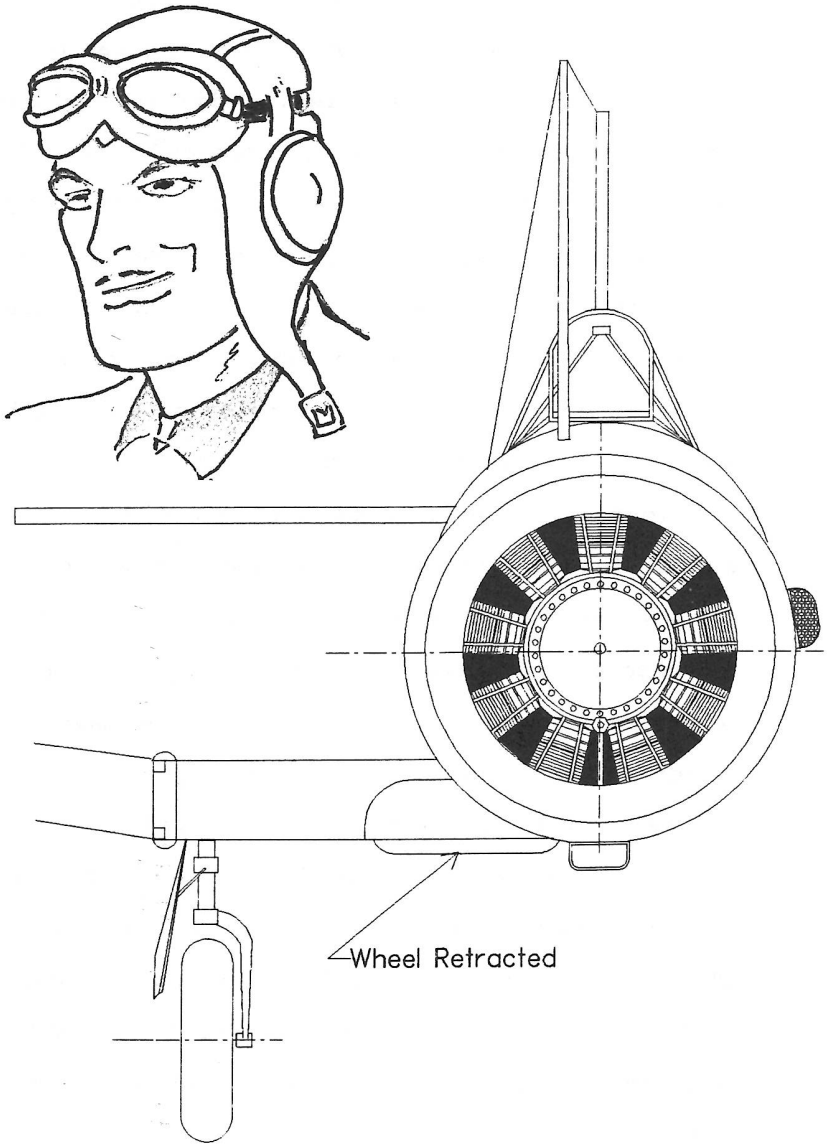

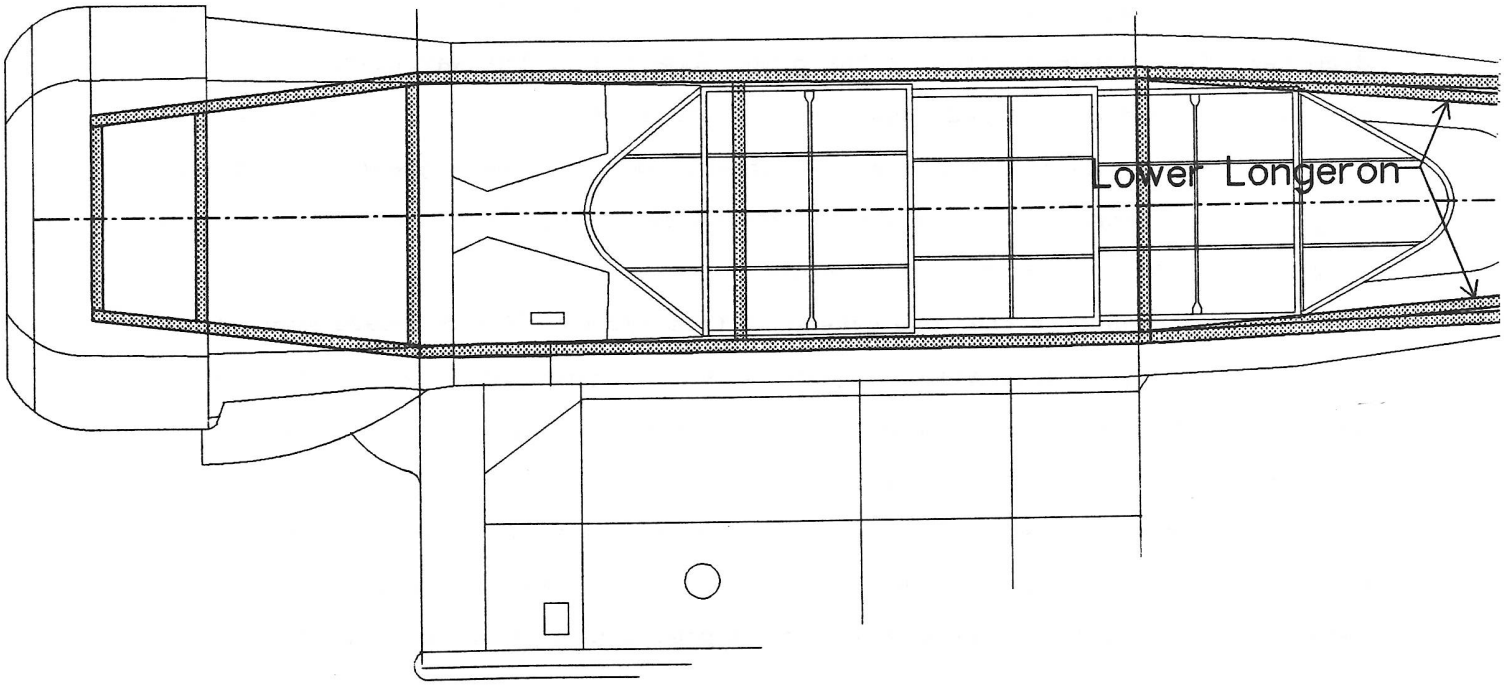

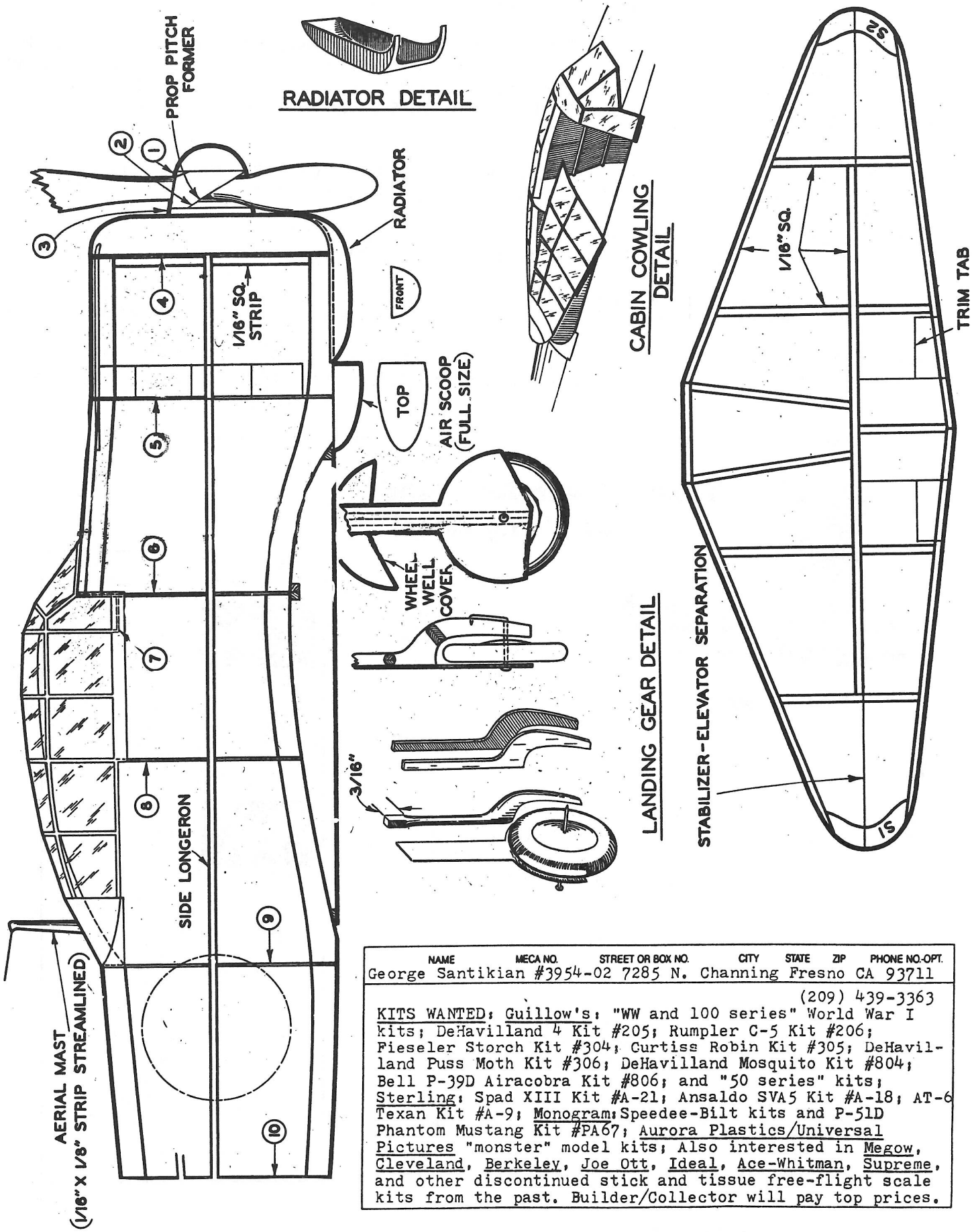

NAME	MECA NO.	STREET OR BOX NO.	CITY	STATE	ZIP	PHONE NO.-OPT.
George Santikian	#3954-02	7285 N. Channing	Fresno	CA	93711	(209) 439-3363

KITS WANTED: Guillow's: "WW and 100 series" World War I kits; DeHavilland 4 Kit #205; Rumpler C-5 Kit #206; Fieseler Storch Kit #304; Curtiss Robin Kit #305; DeHavilland Puss Moth Kit #306; DeHavilland Mosquito Kit #804; Bell P-39D Airacobra Kit #806; and "50 series" kits; Sterling: Spad XIII Kit #A-21; Ansaldo SVA5 Kit #A-18; AT-6 Texan Kit #A-9; Monogram: Speedee-Bilt kits and P-51D Phantom Mustang Kit #PA67; Aurora Plastics/Universal Pictures "monster" model kits; Also interested in Megow, Cleveland, Berkeley, Joe Ott, Ideal, Ace-Whitman, Supreme, and other discontinued stick and tissue free-flight scale kits from the past. Builder/Collector will pay top prices.

Contest Calendar

March ??..D.C. Mazecuters at Patuxent, Lots of FAC events plus others. Contact Claude Powell (301) 872-4105 or Tom Schmitt (301) 530-0327.

March 19..Cleveland Free Flight Society Indoor Contest at Cleveland State University. EZB, Intermediate Stick, Novice Penny Plane, Mini-Stick, No-Cal Scale, Hi-Wing Peanut, other peanut events, WW-I Peanut, 7 gram Bostonian, Jetco R.O.G., Golden Age Scale, WW-II No-Cal Combat. Mike Zand, 7055 Seven Hills Blvd., Seven Hills, Ohio 44134 (216) 524-3480

Feb. 12-13...Feb. 19-20...April 16-17...Miami Indoor Model Assn. FAC events plus other events. Doc Martin, 2180 Tigertail Ave., Miami, Fla. 33133.

March 27...Merrimac Valley Air-Istocrats 16th Annual Indoor Contest for scale and other indoor events. Jim Fiorello, Methuen, Ma. (508) 687-0024.

April 17...Erie Model Aircraft Assn. 18th Annual Snowbird Indoor Meet at Edinboro, Pa. FAC and other events. Vic Didelot, 4410 Lorna Lane, Erie, Pa. 16506 (814) 838-3263.

June 3-4..FAC at USIC at Johnson City, Tenn. FAC Scale, No-Cal Scale, Kit Plan Scale, Pistachio Scale, FAC Hi-Wing, Bostonian, Golden Age Scale, Coconut, Gran Prix. Jim Miller, 107 Lorelei Dr., Fayetteville, Ohio 45118.

****

Take off with Aeroindex and the Flying Aces!

Dear FAC enthusiast,

Aeroindex is a cottage industry with a difference! We buy and sell aviation and model magazines, carry an extensive line of aviation computer clip art, Dover aviation books, and indexes for Wings & Airpower. Aeroindex sells aviation collectibles at airshows and model meets - perhaps you've seen us at the FAC Nats!

Newsletter editors who work on IBM computers will be particularly interested in the Aeroindex line of classic aviation clip art. Nothing polishes publications like detailed, archival aviation images, and we have hundreds. Aeroindex is your source for hard-to-find and out-of-print magazines: Flying Aces, Model Airplane News, Model Builder, Air Classics, Wings & Airpower, and lots more! For a current list of magazines, just send a stamped, self-addressed envelope.

Do you edit a newsletter? Please tell your readers about Aeroindex. Thank you!

Best wishes,

Mark Fineman

PRODUCTS MICROX INCORPORATED
Box 1063 Lorain, Ohio 44055
Phone (216) 282-8354

PA-16 Clipper

Big Flying Scale Kits
Over Two Foot Span
★ Piper Cub 17.95
★ Stinson 125 ..... 17.95
★ Piper PA-16 ..... 17.95

Taylorcraft

Semi-Scale Kits
CO2 or Rubber Power
22" Span
★ Taylorcraft 10.95
★ Stinson Voyager 10.95
★ PC-6 Porter 10.95

Hornet P-30

Contest-Sport Kits
★ Hornet Embryo 10.95
★ Hornet P-30 ..... 16.95
Fits P-30 & Pee Wee Rules

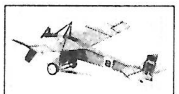
Farman Mosquito

Outdoor Peanut Scale Kits
13" Span
★ Cub 8.95
★ Stinson 125 ..... 8.95
★ Vagabond 8.95
★ Farman 8.95
★ Jodel 8.95
★ Fike 9.95

1/2 A R/C Gas or Electric Kits Fits Astro 035
Taylorcraft ..... 39.95 Stinson 125 ..... 39.95

HARD TO FIND ITEMS
Brown CO_2 Motors and Accessories
Over 20 Sizes of Rubber Strip!
Japanese Tissue And Super Fine Balsa Sheets & Strips
Add 10% Shipping • $2.50 Minimum Shipping
CATALOG $2.00

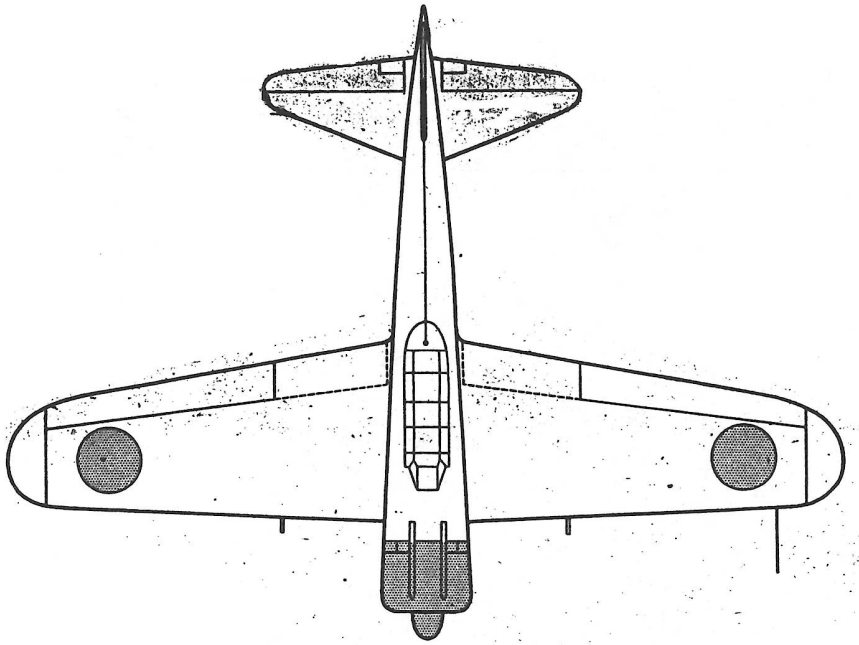

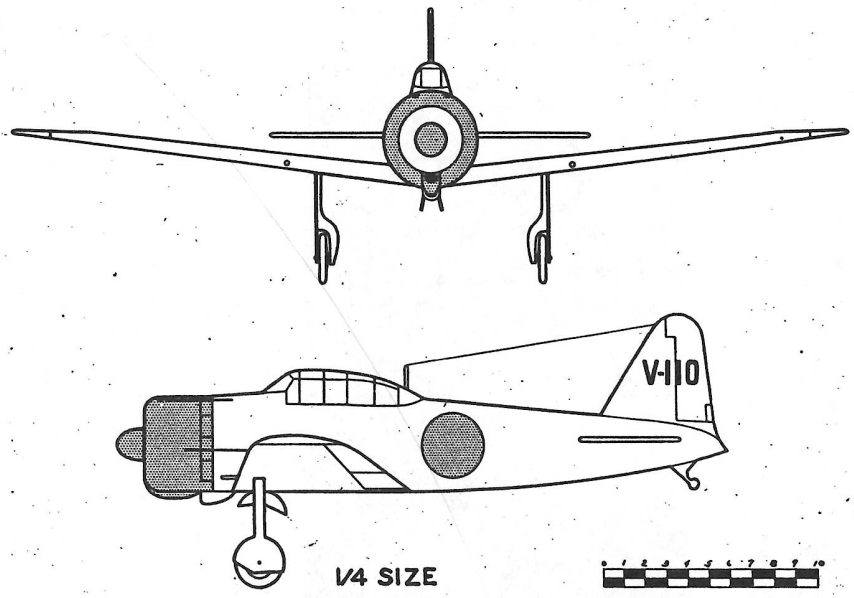

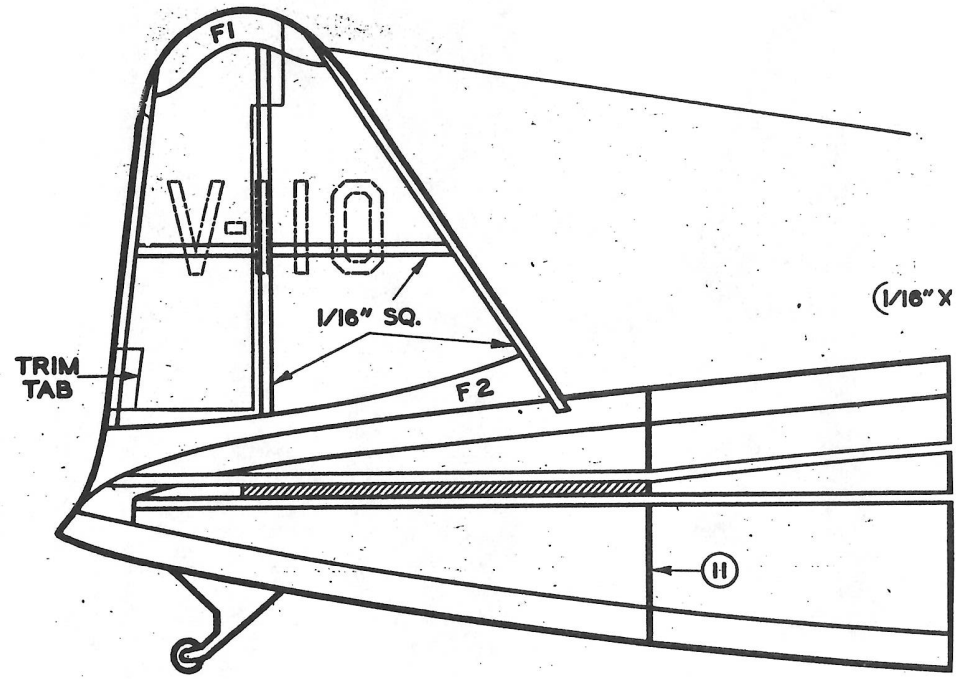

MITSUBISHI "ZERO" TYPE 00

WINGSPAN – 18 INCHES	LENGTH 13-1/8 INCHES
KIT NO. E3	DRAWN BY Sgt. Kiesiewski

Copyright 1943 by COMET MODEL AIRPLANE & SUPPLY CO.

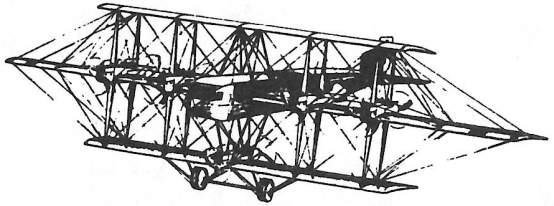

WW1 AERO (1900-1919) and SKYWAYS (1920-1940)

For the restorer, builder, & serious modeller of early aircraft

- information on current projects
- news of museums and airshows
- technical drawings and data
- photographs
- scale modelling material
- news of current publications
- historical research
- workshop notes
- information on paint/color
- aeroplanes, engines, parts for sale
- your wants and disposals

1 year subscription $25 Overseas $30 Sample issues $4 each

Published by: WORLD WAR 1 *Aeroplanes*, INC.

15 Crescent Road, Poughkeepsie, NY 12601 USA (914) 473-3679

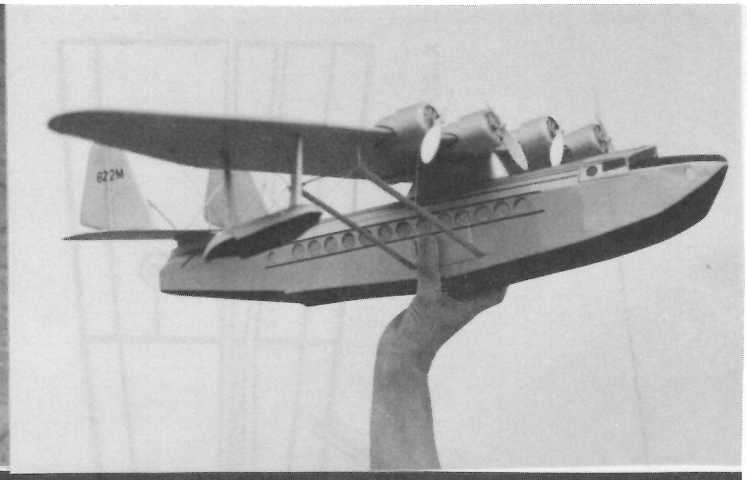

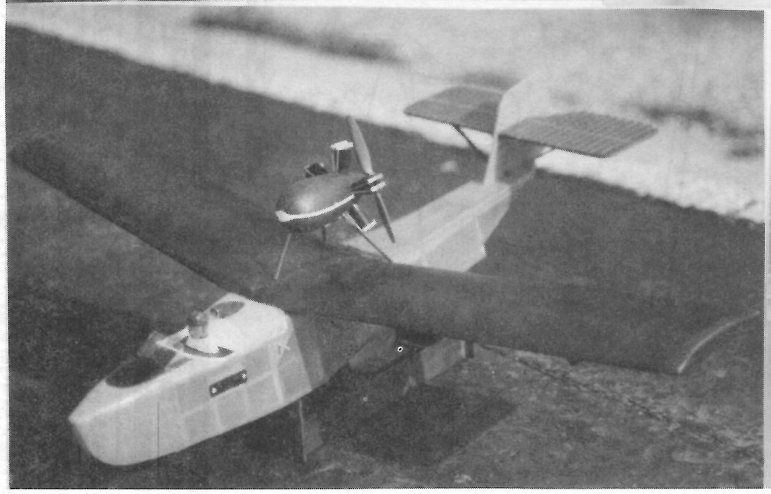

Top row; A fine looking Chester Goon by Walt Leonhardt, how does she fly, Walt? Bill Warner's Sikorsky S-42 powered by 4 electric motors. Hope we see this one at the FAC-Nats, Mk. IX this summer, Bill.

Middle row; Mrs. Russ Sandusky, a new modeler, hard at work on her latest project. Glenn Bearry sent in this pic of his neat Stinson SR-7. Could it be from a Comet plan?

Bottom row; A 1927 Vista Genet, electric powered from a Scientext plan by Otto Klein. Don Brimmer's Fleet Canuck in the pool and ready to take off!

All photos by the builders.

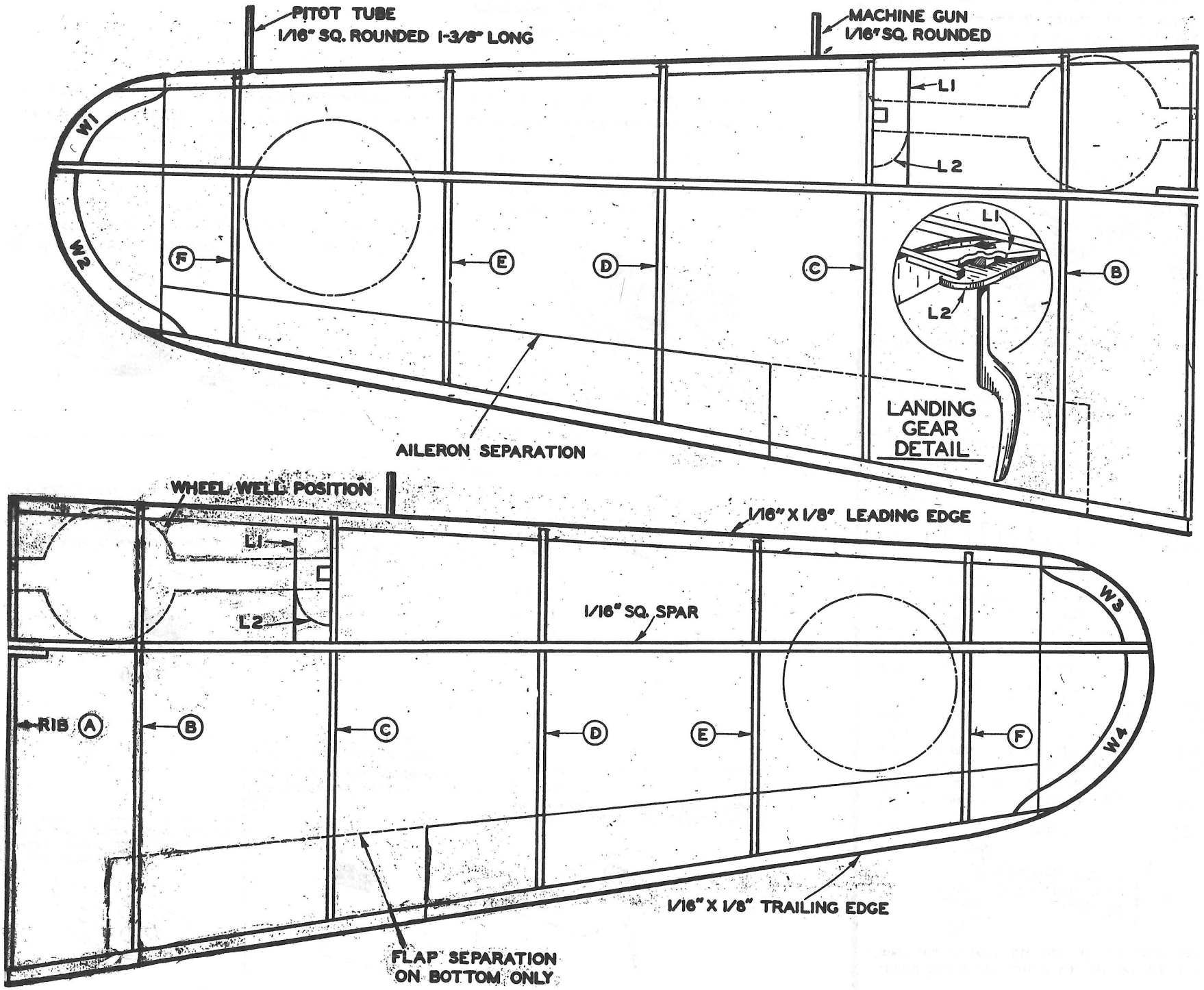
PITOT TUBE
1/16" SQ. ROUNDED 1-3/8" LONG
MACHINE GUN
1/16" SQ. ROUNDED
W1
W2
L1
L2
F
E
D
C
B
LANDING GEAR DETAIL
AILERON SEPARATION
WHEEL WELL POSITION
1/16" X 1/8" LEADING EDGE
1/16" SQ. SPAR
W3
W4
RIB A
1/16" X 1/8" TRAILING EDGE
FLAP SEPARATION ON BOTTOM ONLY

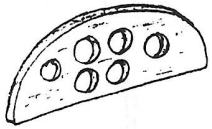

① CUT INSTRUMENT PANEL FROM 1/32" BALSA CUT HOLES W/SHARPENED TUBING

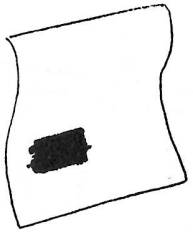

② AIRBRUSH BOND PAPER W/ FLAT BLACK PAINT LARGER THAN INSTRUMENT PANEL

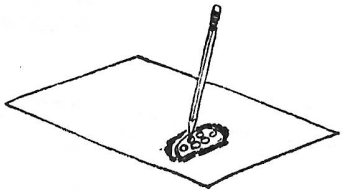

③ MARK EXACT LOCATION OF INSTRUMENTS ON PAINTED AREA W/ PENCIL

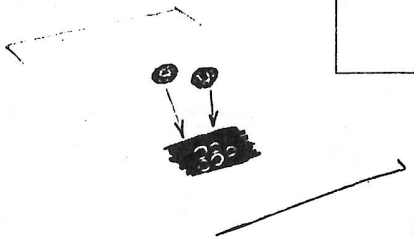

④ USING COMMERCIAL INSTRUMENTS OR ONES CUT FROM MAGAZINES; GLUE INSTRUMENT FACES ON MARKED LOCATIONS USING RC-56

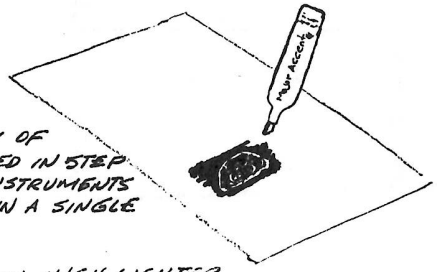

5A MAKE COPY OF SHEET PRODUCED IN STEP 4. THIS PUTS INSTRUMENTS & BACKGROUND IN A SINGLE PLANE

5B USE YELLOW HIGH LIGHTER TO COLOR INSTRUMENT HANDS & BEZEL

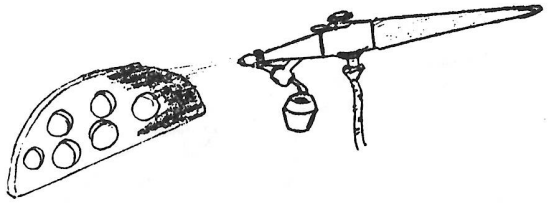

⑥ AIRBRUSH BALSA PANEL W/ APPROPRIATE COLOR: USUALLY FLAT BLACK OR DARK GRAY.

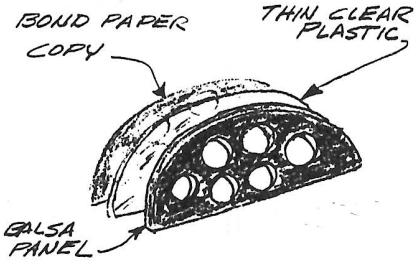

⑦ MAKE A SANDWICH UTILIZING THE BALSA PANEL, CLEAR PLASTIC AND THE BOND PAPER BACKGROUND W/FACES. USE RC-56

HERES A WAY TO MAKE REALISTIC LOOKING INSTRUMENT PANELS WHICH IS A BIG IMPROVEMENT OVER PLAIN PAPER ONES. TRY IT!

BOB ISAACKS
PILOTOS LOCOS - '93

Listed below are the final standings for the Comet and Scientific Postal contests for 1993.

Pilot	Plane	Time	Bonus	Total
1.Dick Dunmire	Curtiss Robin	291	0	291
2.Frank Rowsome	Grumman F4F	121	5	126
3.Dave Linstrum	Puss MOth	118	0	118
4.Ron Hummel	Farman 400	100	0	100
5.Doc Martin	Curtiss Falcon	78	15	93
6.George Nunez	Aeronca (floats)	77	15	92
7.Dave Niedzielski	FW-190A	65	10	75
8.Aaron Petersen	Piper Cub	74	0	74
9.Doc Martin	Farman Strato.	64	5	69
10.George Nunez	Grumman Avenger	60	5	65
11.Jeff Row	Stinson SR-7	55	0	55
12.Walt Leonhardt	Curtiss Robin	53	0	53
13.Walt Leonhardt	Wiley Post "A"	35	15	50
14.Jim Anderson	Puss Moth	42	0	42

SCIENTIFIC HI-FLYERS

Pilot	Plane	Time	Bonus	Total
1.Doc Martin	Howard "Ike"	131	10	141
2.Dick Dunmire	Curtiss XF13C-1	122	0	122
3.Padre Anderson	Mr. Mulligan	104	0	104
4.Jim Kutkuhn	Piper J-4	65	0	65
5.Walt Leonhardt	Mureaux C-1	53	5	58
6.Walt Leonhardt	Fokker D-7	29	15	44

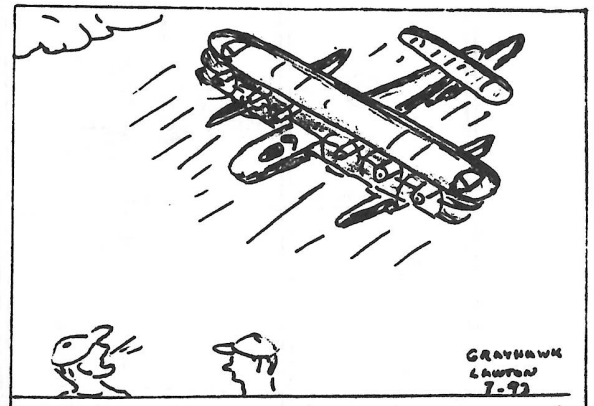

LOOK AT SRULL'S 90 POINT JUMBO GO! WONDER IF HE'D MIND IF I CARESS IT —— WITH A #11 EXACTO ------

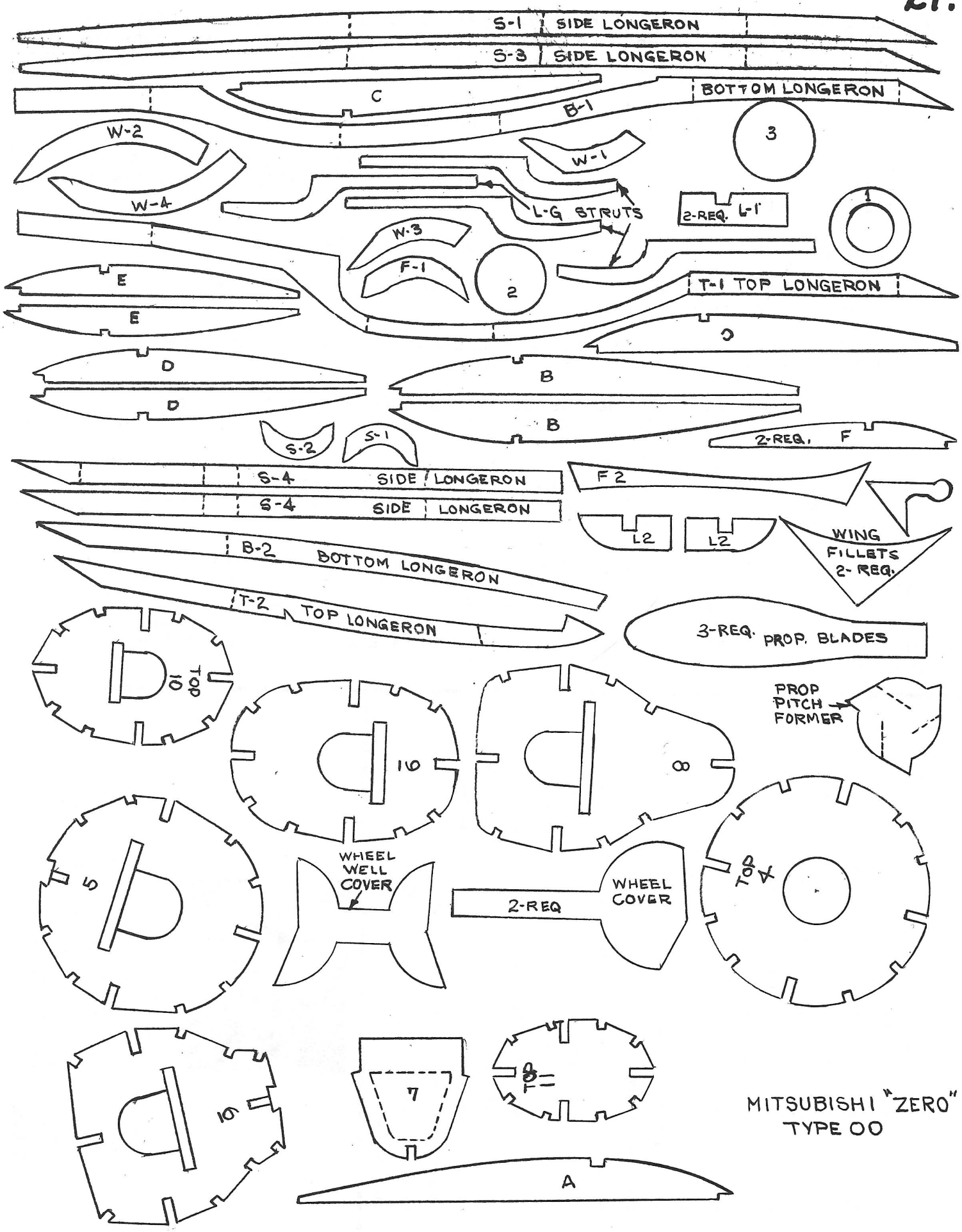
S-1 SIDE LONGERON
S-3 SIDE LONGERON
C
BOTTOM LONGERON
B-1
W-2
W-1
3
W-4
L-G STRUTS
2-REQ. L-1
1
W-3
F-1
2
T-1 TOP LONGERON
E
E
D
D
B
B
S-2
S-1
2-REQ. F
S-4 SIDE LONGERON
S-4 SIDE LONGERON
F2
L2
L2
WING FILLETS 2-REQ.
B-2 BOTTOM LONGERON
T-2 TOP LONGERON
3-REQ. PROP. BLADES
10 TOP
PROP PITCH FORMER
10
8
5
WHEEL WELL COVER
2-REQ
WHEEL COVER
4 TOP
10
7
6
A
MITSUBISHI "ZERO"
TYPE 00

RANDOM RULES FOR THE FAC NATS MARK IX

1. FAC Old Time Rubber will have two (2) official flights on Friday and two (2) official flights on Saturday. The best three (3) flights of the four (4) will be your score. Fly-offs for this event will be on Sunday morning.

2. Electric Ducted Fan Scale models will fly in this event only.

3. Powder Puff Scale for the ladies only. They may fly any size model in this event. They may also fly the same models in all other events that their model fits in.

4. No high wing models in the FAC Peanut event. Parasols, yes.

5. Flying Horde event is for all contestants that did not place in any event. Scale models only.

6. Aerol Trophy Race is for all race contestants who did not qualify for either the Greve or the Thompson Races.

7. Electric Powered Old Time Gas Minis. See rules for this event in the FAC Newsletter #154-80 Nov./Dec. 1993. Other new events are also listed.

8. A bonus of +5 points will be awarded to model aircraft (scale) for the mounting of skis on the landing gear providing that the skis are scale in length and width. This is a new ruling and will be in the next printing of the rules.

If any manufacturers, individuals, FAC Squadrons, etc. would like to sponsor one of the events at this years FAC Nats please contact FAC-GHQ, 3301 Cindy Lane, Erie, Pa. 16506, phone (814) 833-0314 for particulars. So far we have two sponsers. HiLine Electric Model Motors is sponsoring the Ducted Fan event and the Palmetto Squadron #12 is sponsoring the Modern Military event.

FOR IMMEDIATE RELEASE:

A SEARCH IS BEING CONDUCTED THROUGHOUT THE UNITED STATES TO LOCATE AVIATION CADETS OF PILOT CLASS 44I WHO ATTENDED PRE-FLIGHT TRAINING AT MAXWELL FIELD, ALABAMA (AS CLASS 44H) DURING DECEMBER 1943 THROUGH MARCH 1944. AFTER SEVEN MONTHS OF FLIGHT TRAINING AT VARIOUS SCHOOLS OF THE EASTERN FLYING TRAINING COMMAND THESE MEN WERE COMMISSIONED AS OFFICERS IN THE UNITED STATES ARMY AIR CORPS AND AWARDED THEIR SILVER WINGS AS PILOTS OF CLASS 44I ON NOVEMBER 20, 1944. THIS IS THE FIRST TIME THAT A SEARCH THIS FORMIDABLE HAS BEEN ATTEMPTED FOR A PILOT CLASS THAT TRAINED DURING WORLD WAR TWO. THIS CLASS GRADUATED SIXTEEN HUNDRED AND TWENTY FIVE PILOTS OF WHICH ONE-THIRD WERE TRAINED TO FLY FIGHTER AIRCRAFT AND TWO-THIRDS TO FLY BOMBERS. THE PURPOSE OF THIS SEARCH IS TO NOTIFY THESE MEN OF THE FIFTIETH REUNION OF CLASS 44I WHICH IS TO BE HELD AT MONTGOMERY, ALABAMA DURING OCTOBER 1994. ANY MEMBERS OF CLASS 44I OR ANYONE HAVING ANY KNOWLEDGE OF SUCH PERSONS PLEASE CONTACT JOE KING 210 SNOW LANE LEXINGTON, SC. 29073 FOR ADDITIONAL INFORMATION.

S.O.S.--S.O.S.--S.O.S.

Barrie Taylor, 378 Harcourt St. Winnipeg, Manitoba, Canada R3J3H7 is in need of 3-views and other scale documentation for the following aircraft; Koolhoven FK-58 "Flying Dutchman" and the Spartan Cabin.

Shock Absorbing Landing Gear

by Jake Larson

Part Eight

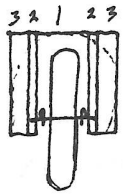

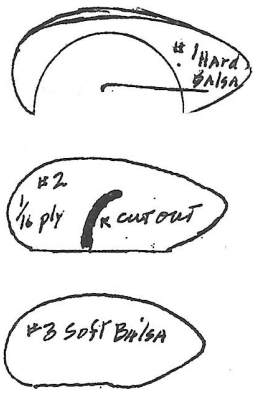

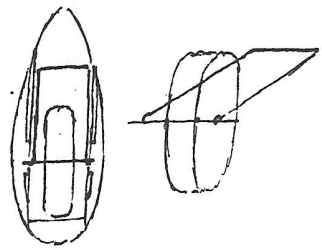

This is too complicated & really doesn't work that well. The Arc cutout in 1/16 ply has to be exact, if the ⊔ shaped shock absorber is springy enough to work right - it lets the wheel jamb up to the top of the pants. If the cutout is short enough to stop the jamb then you don't have enough travel for the absorber to be effective

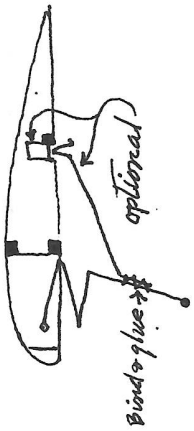

Late 30's, WW II

Stinson Senior Trainer (See previous page - on article about Pants on L.G.)

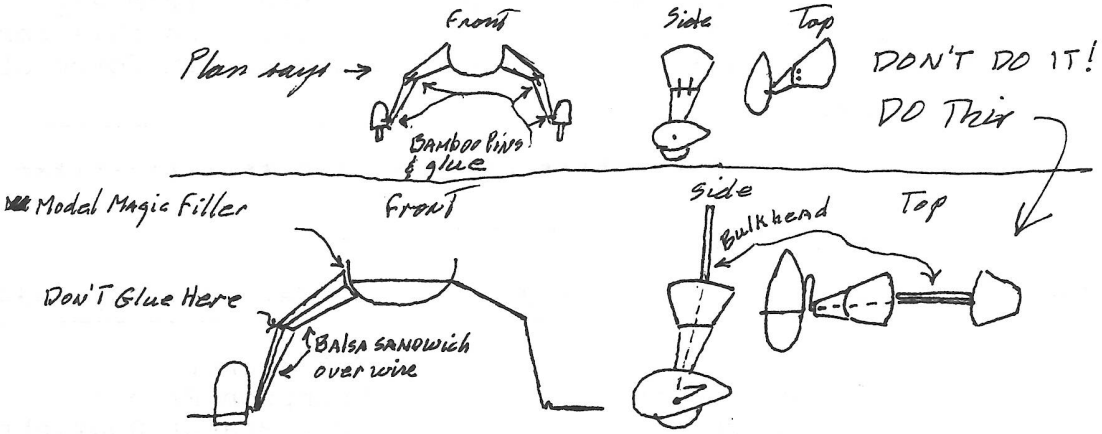

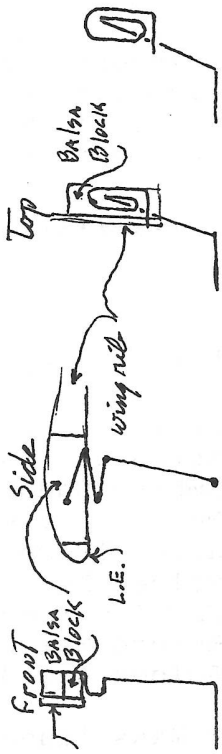

30's & WW II

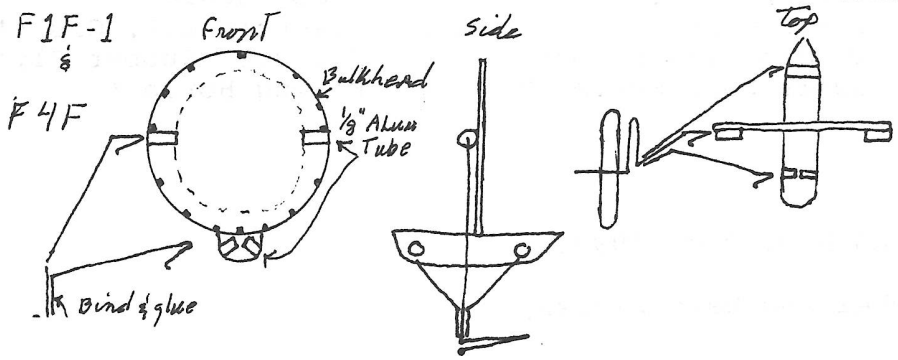

30.

REGRISTRATION FORM
FAC-NATS MARK IX

MAIL TO; Lin Reichel, 3301 Cindy Lane, Erie, Pa. 16506

Name_____ Address_____

City_____ State_____ Zip_____ AMA No._____

I wish to make the following advanced reservations for the FAC Nats Mk. IX.

_____ entry fees at $20.00 each.....$_____

_____ banquet tickets at $16.00 each.....$_____
(with no dormitory reservations)

_____ reservations for double occupancy with meals
and banquet at $163.00 each.....$_____

_____ reservations for single occupancy with meals
and banquet at $206.00 each.....$_____

Total enclosed....$_____

Please note that we are unable to refund cancellations after June 15, 1994. If you plan to share a double occupancy with someone, please indicate their name so we can direct the University to set up the proper room arrangements.

Second person_____

WAIVER: I (we) hereby release the National Warplane Museum, the State University of New York, the Flying Aces Club, the Detroit Cloudbusters Club, the Calumett Escadrille and all persons connected with this contest from any liability whatsoever for accidents incurred while participating in this contest. I (we) also agree to abide by all flying and field rules in force at this contest.

SIGNATURE_____

****

EVENT SCHEDULE FOR THE FAC NATS MARK IX

Friday July 8, 1994	Saturday July 9, 1994	Sunday July 10, 1994
Shell Speed Dash	FAC Scale	FAC Peanut
World War One Dogfight *	High Wing Peanut	Thompson Race *
Embryo Endurance	Greve Race *	WW I Peanut Dogfight *
No-Cal Scale	World War II Combat *	FAC Power Scale
Aerol Trophy Race *	Pioneer Scale	Jumbo Scale
Golden Age Scale (civil)	Electric Ducted Fan Scale**	Electric O.T. Gas **
FAC Old Time Rubber	FAC Old Time Rubber	FAC O.T. Rubber Flyoff
Modern Military ** *	Powder Puff Scale **	Flying Horde *
Golden Age Military * **		

* Mass launch events

** See rules in Issue #154-80 Nov./Dec. 1993.

Contest Directors; Lin Reichel and Dave Livesay.